English

Instruction and operation manual

S530

Ultrasonic Leak Detector (Eco Version)



Dear Customer,

Thank you for choosing our product.

The operating instructions must be read in full and carefully observed before starting up the device. The manufacturer cannot be held liable for any damage which occurs as a result of non-observance or non-compliance with this manual.

Should the device be tampered with in any manner other than a procedure which is described and specified in the manual, the warranty is void and the manufacturer is exempt from liability.

The device is destined exclusively for the described application.

SUTO offers no guarantee for the suitability for any other purpose. SUTO is also not liable for consequential damage resulting from the delivery, capability or use of this device.

Revision: 2026-1

Last modifications: June, 2026

Table of contents

1 Safety instructions....4
2 Registered trademarks....6
3 RF exposure information and statement....7
4 Application....8
5 Features....8
6 Technical data....9
6.1 General data....9
6.2 Electrical data....9
6.3 Performance chart....9
7 Dimensional drawing....10
8 Operating....11
8.1 Operating Principle....12
8.2 Operating Procedure....12
8.3 Electrical connection 13
9 Optional accessories....14
9.1 Technical data....14
9.2 Panel introduction....14
9.3 Example....15
10 Maintenance....16
11 Disposal of waste....16
12 Appendix: Headset Usage....17
12.1 Power on or off....18
12.2 Turn on or off Noise Cancellation....18
12.3 Care and maintenance....19

1 Safety instructions

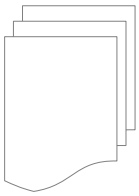

Please check if this instruction manual accords to the product type.

Please observe all notes and instructions indicated in this manual. It contains essential information which have to be observed before and during installation, operation and maintenance. Therefore this instruction manual has to be read carefully by the technician as well as by the responsible user or qualified personnel.

This instruction manual has to be available at the operation site of the leak detector at any time. In case of any obscurities or questions, regarding this manual or the product, please contact the manufacturer.

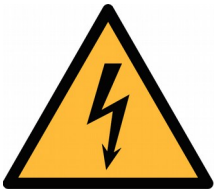

WARNING!

Compressed air!

Any contact with quickly escaping air or bursting parts of the compressed air system can lead to serious injuries or even death!

- Avoid that persons get hit escaping air or bursting parts of the system.

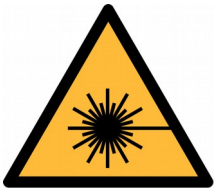

WARNING!

Laser pointer!

Do not point into the eyes with the laser. This can lead to serious injuries particularly on lens and retina or even blindness!

- Never look directly at the laser
- Never point the laser at persons.
- Never point the laser at smooth and reflective surfaces. This can lead to a reflection of the laser.

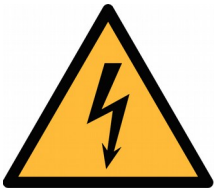

WARNING!

Voltage used for supply!

Any contact with energized parts of the product, may lead to a electrical shock which can lead to serious injuries or even death!

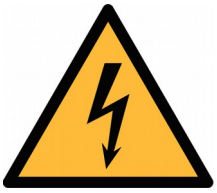

WARNING!

Rechargeable battery!

Improper operation or use may cause personal injury and property damage.

- Do not dismantle, open, or shred rechargeable cells or batteries.
- Do not expose cells or batteries to heat or fire. Do not store them in direct sunlight.
- Do not short-circuit a cell or a battery.
- Do not subject cells or batteries to mechanical shock.
- If you notice any signs of swelling, deformation, or leakage of liquid, or if you experience a significant decrease in capacity, please stop using the battery immediately and dispose of it properly.
- Do not use any charger other than the one provided for this device.
- Do not mix cells of different manufacturers, capacities, sizes, or types within a device.
- Do not leave a battery on prolonged charge when not in use.
- Do not store for more than three months. It must be charged at least once after three months of storage.

General safety instructions

- It is not allowed to use the product in explosive areas.
- Please observe the national regulations before/during operation.

Remarks

- It is not allowed to disassemble the product.



ATTENTION!

Permitted operating parameters!

Observe the permitted operating parameters, any operation exceeding this parameters can lead to malfunctions and may lead to damage on the instrument.

- Do not exceed the permitted operating parameters.
- Make sure the product is operated in its permitted limitations.
- Do not exceed or undercut the permitted storage and operation temperature and pressure.
- The product should be maintained and calibrated frequently, at least annually.



ATTENTION!

Measurement values can be affected by malfunction!

The product must be used properly and frequently maintained, otherwise it may lead to wrong measurement values, which can lead to wrong results.

- Avoid condensation on the leak detector element as this will affect the accuracy enormously.

Storage and transportation

- Make sure that the transportation temperature of the leak detector is between -20°C ... 50°C.
- For transportation it is recommended to use the packaging which comes with the leak detector.
- Please make sure that the storage temperature of the sensor is between -10°C ... 50°C.
- Avoid direct UV and solar radiation during storage.
- For the storage the humidity has to be <90%, no condensation.

2 Registered trademarks

SUTO®	Registered trademark of SUTO iTEC
MODBUS®	Registered trademark of the Modbus Organization, Hopkinton, USA
PROFIBUS®	Registered trademark of the PROFIBUS User Organization, Karlsruhe, Germany
Android™, Google Play	Trademarks of Google LLC

3 RF exposure information and statement

This equipment complies with FCC RF radiation exposure limits set forth for an uncontrolled environment. This equipment should be installed and operated with minimum distance of 20 cm between the radiator and your body.

This device complies with part 15 of the FCC rules. Operation is subject to the following two conditions: (1) this device may not cause harmful interference, and (2) this device must accept any interference received, including interference that may cause undesired operation.

NOTE: The manufacturer is not responsible for any radio or TV interference caused by unauthorized modifications to this equipment. Such modifications could void the user’s authority to operate the equipment.

NOTE: This equipment has been tested and found to comply with the limits for a Class B digital device, pursuant to part 15 of the FCC Rules. These limits are designed to provide reasonable protection against harmful interference in a residential installation. This equipment generates uses and can radiate radio frequency energy and, if not installed and used in accordance with the instructions, may cause harmful interference to radio communications. However, there is no guarantee that interference will not occur in a particular installation. If this equipment does cause harmful interference to radio or television reception, which can be determined by turning the equipment off and on, the user is encouraged to try to correct the interference by one or more of the following measures:

- Reorient or relocate the receiving antenna.
- Increase the separation between the equipment and receiver.
- Connect the equipment into an outlet on a circuit different from that to which the receiver is connected.
- Consult the dealer or an experienced radio/TV technician for help.
- This device and its antenna(s) must not be co-located or operating in conjunction with any other antenna or transmitter.

4 Application

The S530 is an Ultrasonic Leak Detector for pneumatic systems. When gases are leaking through tubes and tanks an ultrasonic sound is produced which can be detected by S530 even from a distance of several meters.

The S530 transforms these inaudible signals into a frequency which can be easily heard by using the supplied noise-isolating headset. In unpressurised systems an ultrasonic tone generator can be used whose sound will leak through small openings.

The integrated laser pointer helps to spot the leak from a distance.

The S530 leak detector is not developed to be used in explosive areas. For the use in explosive areas please contact the manufacturer.

The S530 is mainly used in compressed air systems in industrial environment.

5 Features

- Leak detection in compressed air, refrigerants, and any gases
- Insulation test of doors and windows
- Detection of partial electrical discharges causing damages on insulations
- Applicable to noisy environments
- Included laser pointer helps to locate the leak
- Included display, showing the level of the leak

6 Technical data

6.1 General data

CE FC	
Principle of measurement	Ultrasonic leak detection
Measuring medium	Air, refrigerants and any gases
Plugs	Plug 1:3.5 mm stereo phone jack shared by headphone and battery charger Plug 2:3.5 mm stereo phone jack for sensor
Operating frequency	40 kHz ± 2 kHz
Operating temperature	0°C ... 40°C
Operating time	About 6 hours without Laser pointer on About 4 hours with Laser pointer on
Charging temperature	10°C ... 45°C
Charging time	Around 1.5 hours
Material of the detector	PC + ABS
Dimensions	See dimensional drawing on the next page
Display	3 color black-mask LCD, 10 levels
Laser pointer	640 ... 660 nm wavelength 0.4 ... 0.5 mW output power
Weight	2.5 kg (full set)

6.2 Electrical data

Power supply	Ni-MH rechargeable battery 4.8 V, 600 mAh

6.3 Performance chart

The table shows the detection distance of varicose hole diameters at different pressures (lab environment).

Pressure / diameter	0.1 mm	0.2 mm	0.5 mm
0.5 bar	2 m	2 m	10 m
5.0 bar	8 m	14 m	18 m

7 Dimensional drawing

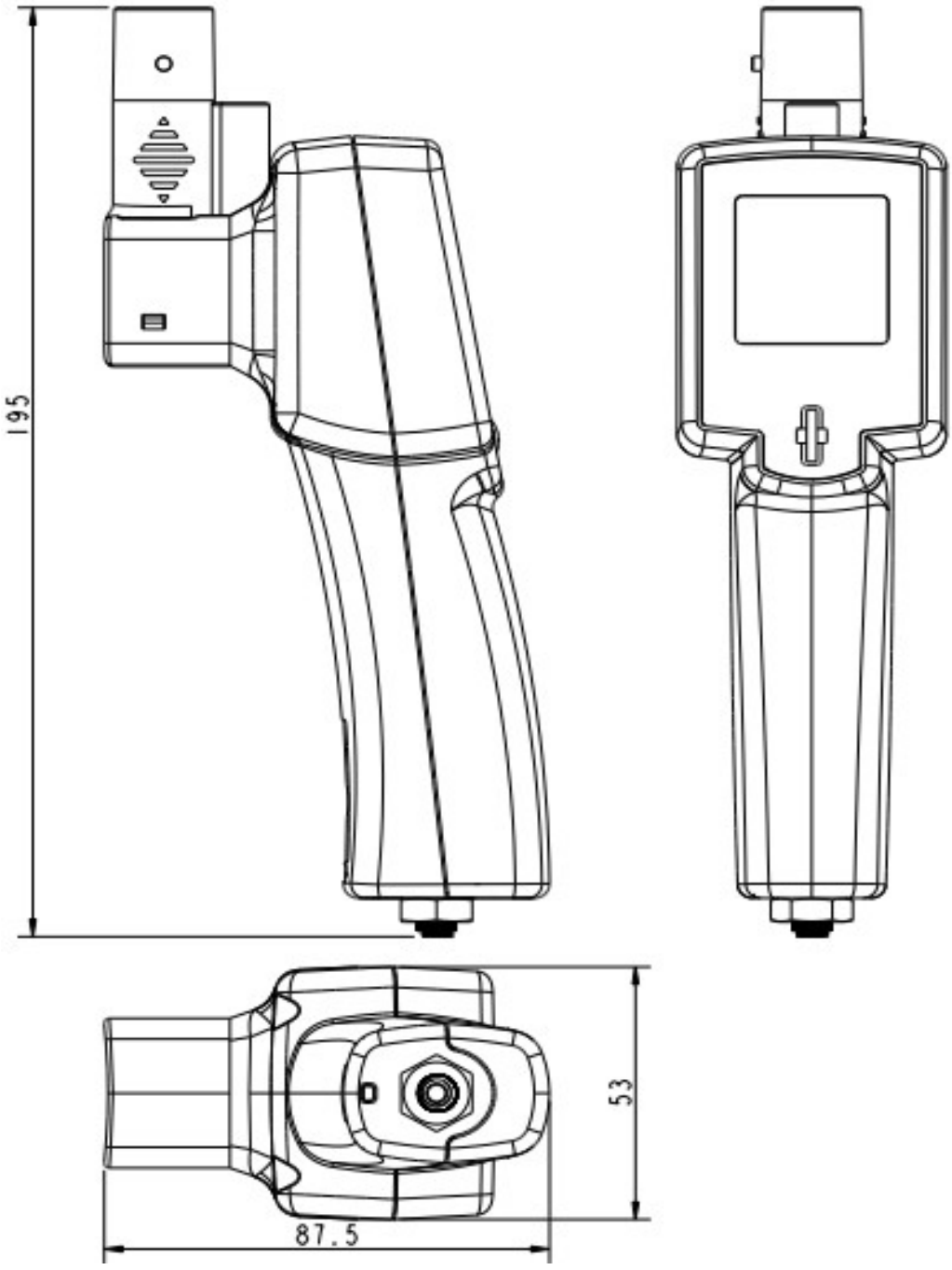

8 Operating

All components listed below are included in your package.

Qty	Description	Order No.
1	S530 Ultrasonic Leak Detector	P560 0102
1	Sensor unit	S605 0001
1	Noise-isolated/canceling headset	A554 0119
1	Focus tube and focus tip	A530 0101
1	Battery charger	A554 0113
1	Transport case	A554 0101







Optional accessories

Description	Order No.
Ultrasonic transmitter	A554 0133

8.1 Operating Principle

Air leaks produce wide-band ultrasounds in the range of 20 ... 80 kHz. The higher the frequency the more energy it contains. But higher frequencies can not be transported in air that far. That is why the leak detector operates at a centre frequency of 40 kHz which compromises an optimum between energy and distance. Frequencies below and above are cut in order to minimize the noise level.

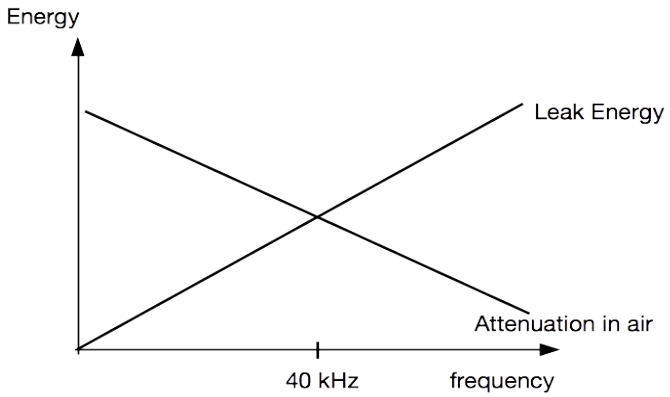

8.2 Operating Procedure

The following steps explain the procedure of an appropriate use.



1. Press the Power button.

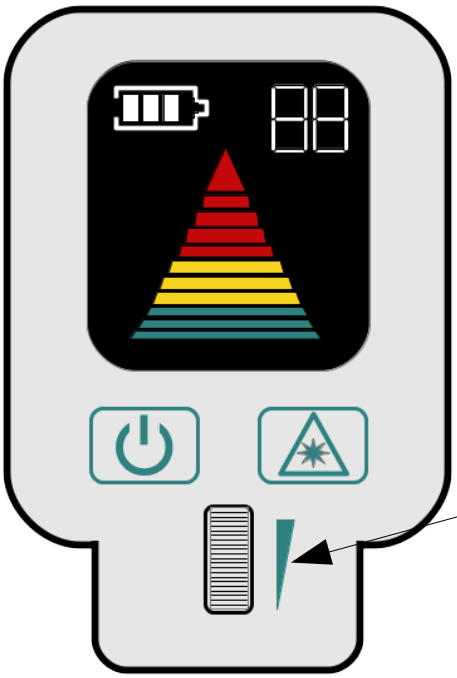

2. The Display of the S530 look like the picture on the left side.
   - The laser pointer is off.
   - the Display will show you:
     - The battery level.
     - Green to red indicates the intensity of the sound heard by the headset.
   - User can change the sensitivity with the wheel. When a leak occurs, the greater the sensitivity, the greater the sound heard from the headset.





3. To activate the laser, please press the button which is shown on the left side.

4. Point with the laser at an assumed leak. The display will show the level of the leak.

5. To find the exact location of the leak screw the focus tube and the focus tip on the sensor.

6. Scan with the focus tip the rough location till the exact location is found.

8.3 Electrical connection

Either the headphone or the charger can be connected to S530 at a time.

Remark:

If the instrument has not been used for more than 2 months, the battery might be over discharged. Connect the battery charger and wait about 2-3 minutes until the display can show you the actual battery status.

9 Optional accessories

The ultrasonic transmitter is an optional accessory for the S530. It generates an ultrasonic tone which can be detected by the S530. That is why a leak detection in a non-pressurized system is possible.

9.1 Technical data

Frequency	40 kHz
Power indicator	This indicator is on when the power is on. If this indicator does not come on after the power is turned on, the batteries need to be replaced.
Operating temperature	0 … 50°C (32 … 122°F)
Operating humidity	Maximum 80% rH
Power supply	Two AAA batteries
Weight	Approx. 50 g/0.11 lb (including battery)
Dimension	100 X 35 X 23 mm / 3.9 X 1.4 X 0.9 inch

9.2 Panel introduction

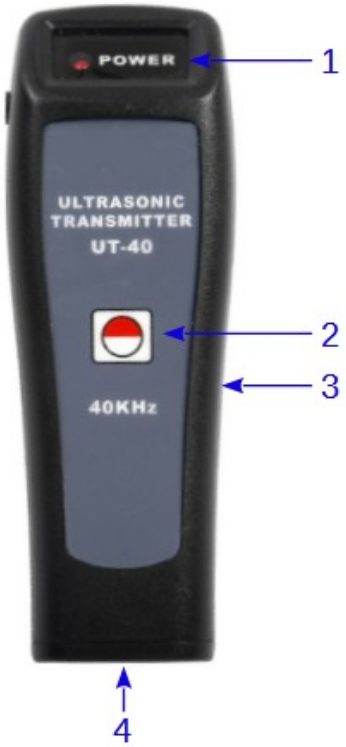

1 Power indicator
2 Power ON/OFF button
3 Rear battery cover
4 Emitter

Note: The ultrasonic transmitter cannot turn off automatically. When you do not use it, turn off the power to extend battery life.

9.3 Example



Leak test at a tank:

If an ultrasonic transmitter is inside of a tank, the ultrasonic which is produced by the generator can flow through leaks and detected by the S530.

10 Maintenance

To clean the sensor and its accessories it is recommended to use moist cloth only.



ATTENTION!

Do not use isopropyl alcohol to clean the sensor and its accessories!

11 Disposal of waste



Electronic devices are recyclable material and do not belong in the household waste.
The detector, the accessories and its packings must be disposed according to your local statutory requirements.
The dispose can also be carried by the manufacturer of the product, for this please contact the manufacturer.

12 Appendix: Headset Usage

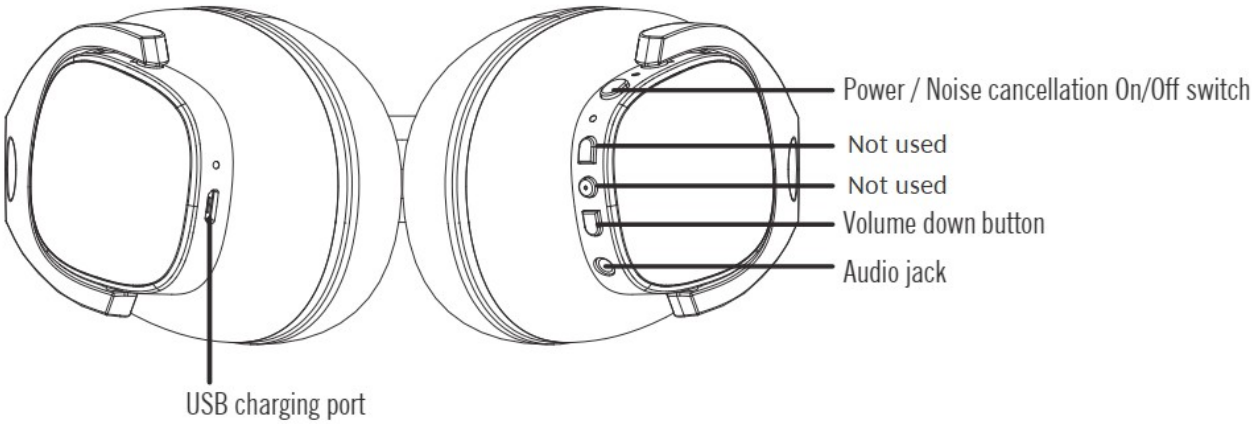

Note: The headset can work with S530 via audio cable connection only.

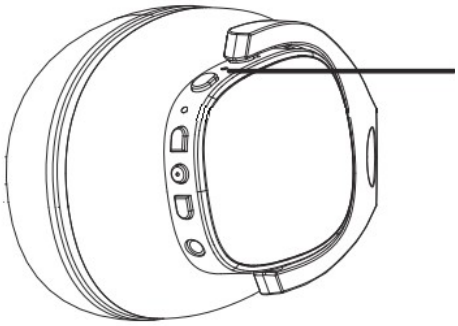

Indicator	Headset status
Solid green	Noise Cancellation ON

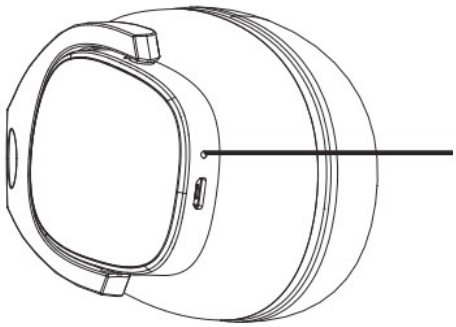

Indicator	Headset status
Solid red	Charging

12.1 Power on or off



Press and hold the button for 2 seconds.
You hear the power-on tone.
Note: Noise cancellation is enabled when the power is turned on.

Press and hold the button for 2 seconds.
You hear the power-off tone.

12.2 Turn on or off Noise Cancellation

1. In the power-off state, press and hold for 2 seconds. You can hear the voice prompting POWER ON. Meantime, Noise Cancellation is turned on as well.
2. To turn off Noise Cancellation in the power-on state, click the button.

   After the Noise Cancellation is turned off, you can hear a voice prompting ANC IS OFF.
3. To turn on Noise Cancellation in the power-on state, click the button.

   After the Noise Cancellation is turned off, you can hear a voice prompting ANC IS ON.

   Note: The noise cancelling function only works when the headset is powered on.

12.3 Care and maintenance

- Keep the product away from humid places to avoid damaging the internal circuit.
- Do not put the product in places exposed to the sun or at high temperature. The high temperature will shorten the service life of electronic components, damage battery, and deform plastic components.
- Do not put the product in cold places to avoid damaging the internal circuit board.
- Do not dismantle the product. Non-professional personnel may damage the product.
- Do not drop, vibrate strongly, strike the product with hard objects to avoid damaging the internal circuit.
- Do not use drastic chemicals or cleaner to clean the product.
- Do not use sharp objects to scratch the product to avoid damaging the shell and affecting the product appearance.

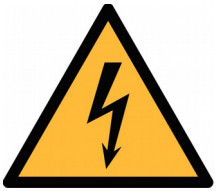

WARNING!

To guarantee your personal safety, please do not wear or keep headphones in the vicinity (closer than 10 cm) of a pacemaker.



ATTENTION!

The maximum charging voltage is 5 V.
Inappropriate charging may cause severe damage, fire, or electrocution hazard.

SUTO iTEC GmbH
Grißheimer Weg 21
D-79423 Heitersheim
Germany

Tel: +49 (0) 7634 50488 00
Email: sales@suto-itec.com
Website: www.suto-itec.com

SUTO iTEC (ASIA) Co., Ltd.
Room 10, 6/F, Block B, Cambridge Plaza
188 San Wan Road, Sheung Shui, N.T.
Hong Kong

Tel: +852 2328 9782
Email: sales.asia@suto-itec.com
Website: www.suto-itec.com

SUTO iTEC Inc.
5460 33rd St SE
Grand Rapids, MI 49512
USA

Tel: +1 (616) 800-7886
Email: sales.us@suto-itec.com
Website: www.suto-itec.com

All rights reserved © Modifications and errors reserved

S530_IM_EN_V2026-1