English

Instruction and Operation Manual

S330/S331

Display/Display and Data Logger



Compact version



Flex version

Dear Customer,

Thank you for choosing our product.

Please read the operating instructions in full and carefully observe them before starting up the device. The manufacturer cannot be held liable for any damage which occurs as a result of non-observance or non-compliance with this manual.

Should the device be tampered with in any manner other than a procedure which is described and specified in the manual, the warranty is void and the manufacturer is exempt from liability.

The device is destined exclusively for the described application.

SUTO offers no guarantee for the suitability for any other purpose. SUTO is also not liable for consequential damage resulting from the delivery, capability or use of this device.

Revision: 2026-1-1



Last modifications: March, 2026

Table of Contents

1 Safety Instructions....6
2 Registered Trademarks....7
3 Application....8
4 Features....9
5 Technical Data....10
5.1 General Data....10
5.2 Electrical Data....10
5.3 Input Signals....10
5.4 Output Signals....11
6 Installation 11
6.1 Installation Requirements....11
6.2 Install the S330/S331....11
6.2.1 Install Compact S330/S331....12
6.2.1.1 Wall Mounting 12
6.2.1.2 Panel Mounting 13
6.3 Install Flex S331....14
7 Overview of Setting and Operation of S330/S331....15
8 Electronic Connection....16
8.1 Terminals Introduction....16
8.1.1 Digital Inputs....17
8.1.2 Analog Inputs (Option A1662)....18
8.1.3 Analog / Pulse Output 18
8.1.4 Alarm Output 19
8.1.4.1 Integrated Alarm Relay....19
8.1.4.2 External Alarm Relay Module....21
8.1.5 Data Interface 21
8.2 Connect S330/S331 to External Devices 21
8.2.1 Connect compact S330/S331 to Power Supply 21
8.2.2 Connect flex S331 to Power Supply 23
8.2.3 Power for Connected Sensors....25
8.2.4 Connect External Alarm Units....26
8.2.5 Connect Devices to Terminals A and B via SDI....26
8.2.6 Connect Devices to Terminal A and B via Modbus....27
8.2.6.1 Modbus/RTU Cable Length....28
8.2.6.2 Modbus/RTU Wiring and Cable Type....28
8.2.6.3 Daisy-Chain using RS-485 Splitter....29
8.2.7 Connect SUTO Devices to Terminals E and F via Analog/Pulse (A1662 option)....31
8.2.8 Connect 3rd Party Analog/Pulse devices to Terminals E and F (A1662 Option)....32
8.2.9 Loop Analog Signals to a PLC (A554 3313) 34

9 Configuration using S4C-Display Software.....35
9.1 Establish Communication between S330/S331 and S4C-Display.35
9.2 Add Devices to S330/S331.....36
9.2.1 Add an SDI Device to S330/S331.....36
9.2.2 Add a SUTO Modbus slave to S330/S331.....39
9.2.3 Add a SUTO Analog/Pulse Device to S330/S331.....44
9.2.4 Add a 3rd Party Device to S330/S331.....46
9.3 Download Configurations to S330/S331.....50
9.4 Save/Load Configuration as Files.....51
9.4.1 Save Configuration to a File.....51
9.4.2 Load configuration from a file.....51
10 Settings using Touchscreen 52
10.1 Value Screen.....52
10.2 Main Menu.....53
10.3 Icons in the Status Bar 54
10.4 Graphic Screen.....54
10.4.1 Add a Data Curve.....54
10.4.2 View Curves.....56
10.5 Sensor Setting.....57
10.5.1 Change Sensor Settings.....57
10.5.2 Dew Point Sensor 57
10.5.3 Flow Sensor 59
10.5.4 Vacuum Flow Sensor (Virtual Sensor).....61
10.5.5 Oil Vapor Sensor.....62
10.5.6 Analog Input Channel 63
10.6 Alarm Management.....64
10.6.1 Alarm Setting.....64
10.6.2 Monitor and Dismiss Alarms via S330/S331.....65
10.7 Logger 66
10.8 Files.....67
10.9 Service Info 68
10.10 System Setting 68
10.11 Communication.....69
10.12 Establish S4A Remote Connection.....70
10.13 SIM Card Requirement for 4G/LTE Option.....72
10.13.1 Data Traffic.....72
10.13.2 PIN Code Protection.....73
11 Export Logger Files and Screen-shots.....74
11.1 Export Logger Files and Screen-shots using S4A 74
11.2 Export Logger Files and Screenshots using USB Disk.....77
12 Build Network using Modbus Interface.....79
12.1 Integration with a Factory Automation System.....79

12.1.1 RS-485 through the Modbus-to-RTU gateway.....79
12.1.2 Field-bus Ethernet through the Modbus/TCP.....80
12.2 Standalone Solution.....80
12.2.1 Monitoring and Analysis Software.....80
12.2.2 Physical Networking Modes.....81
12.2.2.1 RS-485.....81
12.2.2.2 Ethernet.....82
12.2.2.3 re Complex Networking Solutions.....82
12.2.3 Hardware Connection.....83
12.2.3.1 Ethernet Hardware.....83
12.2.3.2 RS-485 Hardware.....84
12.2.4 Fieldbus Interface Configuration.....85
12.2.4.1 Field bus RS-485 settings.....86
12.2.4.2 Field Bus Ethernet Settings.....86
12.3 Print Modbus Slave Register Table.....87
12.4 Troubleshooting.....89
13 Monitor Data Remotely 91
13.1 Enable remote Access.....91
13.2 Monitor Data through an Internet Browser.....91
13.3 Monitor Data through S4A Software.....92
14 Extended Use of Virtual Channels.....93
14.1 Virtual Channels.....93
14.1.1 Monitor Vacuum Flow and Consumption.....93
14.1.2 Monitor Flow or Consumption for Several Branch Lines.....97
14.2 Monitor Compressor Run Time.....99
15 Firmware Update.....101
15.1 Update using S4C-Display.....101
15.1.1 Preparation.....101
15.1.2 Update Steps.....101
15.2 Update using a USB Stick.....103
15.2.1 Preparation.....103
15.2.2 Update Steps.....104
16 Optional Accessories.....104
17 Maintenance.....105
18 Disposal of Waste.....105
19 Appendix A – Modbus Interface 106
20 Appendix B – Power Consumption of Sensors 107

1 Safety Instructions

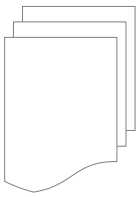

Please check if this instruction manual matches the product type.

Please observe all notes and instructions indicated in this manual. It contains essential information which must be observed before and during installation, operation and maintenance. Therefore this instruction manual must be read carefully by the technician as well as by the responsible user / qualified personnel.

This instruction manual must be available at the operation site of the display and data logger at any time. In case of any obscurities or questions, regarding this manual or the product, please contact the manufacturer.



WARNING!

Voltage used for supply!

Any contact with energized parts of the product may lead to an electrical shock which can lead to serious injuries or even death!

- Consider all regulations for electrical installations.
- The system must be disconnected from any power supply during maintenance work.
- Any electrical work on the system is only allowed by authorized qualified personal.



WARNING!

Permitted operating parameters!

Observe the permitted operating parameters. Any operation exceeding this parameters can lead to malfunctions and may lead to damage on the instrument or the system.

- Do not exceed the permitted operating parameters.
- Make sure the product is operated in its permitted limitations.
- Do not exceed or undercut the permitted storage and operating temperature and pressure.

General safety instructions

- It is not allowed to use the product in explosive areas.
- Please observe the national regulations before/during installation and operation.

Remark

- It is not allowed to disassemble the product.



ATTENTION!

Measurement values can be affected by malfunction!

The product must be installed properly and frequently maintained, otherwise it may lead to wrong measurement values, which can lead to wrong results.

Storage and transportation

- Make sure that the transportation temperature of the display and data logger is between -20 ... +60°C.
- For transportation it is recommended to use the packaging which comes with the display.
- Please make sure that the storage temperature of the display is between -20 ... +70°C.
- Avoid direct UV and solar radiation during storage.
- For the storage the humidity must be <90%, no condensation.

2 Registered Trademarks

Trademark	Trademark owner
SUTO®	SUTO iTEC
MODBUS®	Modbus Organization, Hopkinton, USA
Android™, Google Play	Google LLC

3 Application

The S330 Display is mainly used to display all relevant parameters in the compressed air system, such as flow rate, dew point, pressure, temperature, power, compressor condition, and so on). The S331 Display and Data Logger is of the function of recording the above parameters in addition to the display function.

The compact version and flex version are available for the S330/S331. Their differences are listed in the table below.

Difference	**Compact version**	**Flex version**
Availability	S330 and S331	S331
Power supply	20 W	60 W
Power supply for sensors	10 W	50 W
Dimension	173*145*92 (mm)	306*225*139 (mm)
Weight	0.52 kg	2.12 kg
Number of cable glands	3 or 4	8
Installation method	Panel or wall mounting	Wall mounting
USB port	Type-C on front panel	Type-C on side panel

The following table lists the maximum number of channels and connected devices by input types.

Input type	**SDI**	**Analog& Pulse**	**Virtual Channel**	**Modbus**
Max. number of channels	12	4	10	58
Max. number of connected devices	2	2	N/A	16

The S330/S331 is mainly used in compressed air systems in the industrial environment. It is not developed to be used in explosive areas. For the use in explosive areas, please contact the manufacturer.

4 Features

- Provides 5” high-resolution colour touch screen.
- Supports connections to all SUTO sensors and third-party sensors.
- Supports 16 Modbus, 2 SDI, 2 analog, and 2 pulse sensors.
- Supports up to 100 measuring channels.
- Wall mount and panel mount are supported.
- USB port to enable data transfer to memory stick or PC.
- RS-485 (Modbus / RTU, SUTO-Bus) and Ethernet (Modbus / TCP, SUTO-Bus) interfaces to enable connections to the factory automation system.
- 10 W (compact version) or 50 W (flex version) sensor power supply (24 VDC).
- The S331 can store up to 100 million measurement values.
- With the optional 4G/LTE modem and the S4A software, you can view the online measurement values and read out the logging files remotely.
- Alarm monitoring with two integrated relay outputs and an optional 8-channel relay module.
- Integrates Web server for remote monitoring.
- Supports monitoring of the compressor run time.

5 Technical Data

5.1 General Data

CE FC	
Data logger (only S331)	Internal, 100 million values
Operating temperature	0 ... +50°C
Housing material	Compact version: PC + ABS Flex version: PC
Protection class	IP65
Dimensions	See the dimensional drawing in section 6.2 Install the S330/S331.
Display	5” high-resolution graphic display, 800 x 480 pixels touch screen
Cable entry diameter	4.5 … 8 mm
Cable	Supply: AWG12 ... AWG24, 0.2 ... 2.5 mm² Signals: AWG16 ... AWG28, 0.14 ... 1.5 mm²
Weight	Compact version: 0.52 kg Flex version: 2.12 kg

5.2 Electrical Data

Power supply	Compact version	100 ... 240 VAC, 20 VA (option A1663) 18 ... 30 VDC, 20 W (option A1664)
	Flex version	85 … 305 VAC, 60 W (option A1676) 18 … 30 VDC, 60 W (option A1677)
Sensor supply	Compact version: 24 VDC, 10 W Flex version: 24 VDC, 50 W	

5.3 Input Signals

Digital input	2 x SDI sensors 16 x RS-485 Modbus/RTU Sensors
Analog input (optional)	2 x 0 ... 20 mA / 4 ... 20 mA / 0 ... 10 V 2 x pulse
Pulse input	100 Hz maximum; 28 V, 10 mA

5.4 Output Signals

Analog / Pulse output	4 ... 20 mA signal and pulse signal can be looped through the display by using the connection board
Alarm output	Integrated 2 relays, 230 VAC, 3 A, NC Optional relay module (A1510)
Interface	Ethernet (Modbus/TCP), RS-485 (Modbus/RTU), USB-C port

6 Installation

Make sure that all components listed below are included in your package.

Qty	Description	Item No.
1	S330 or S331 Compact version with ordered options or S331 Flex Version with Wall Casing	D500 0333 (without data logger) D500 0331 (with data logger) D500 0335 (with data logger)
1	USB-C cable, USBA to USB-C, 1.5 m	A553 0143
1	Instruction manual	No P/N

6.1 Installation Requirements

- The S330/S331 is for indoor use only! At an outdoor installation, the device must be protected from solar radiation and rain.
- It is strongly recommended not to install the S330/S331 permanently in a wet environment.

6.2 Install the S330/S331

The S330/S331 can either be mounted into a panel or on a wall if ordered with the optional wall casing. The casing of the S330/S331 must be fixed on the wall using suitable dowels and screws.



ATTENTION!

Wrong measurement is possible if the S330/S331 is not installed correctly.

6.2.1 Install Compact S330/S331

The compact version supports both panel mounting and wall mounting.

6.2.1.1 Wall Mounting

Dimensional drawing:

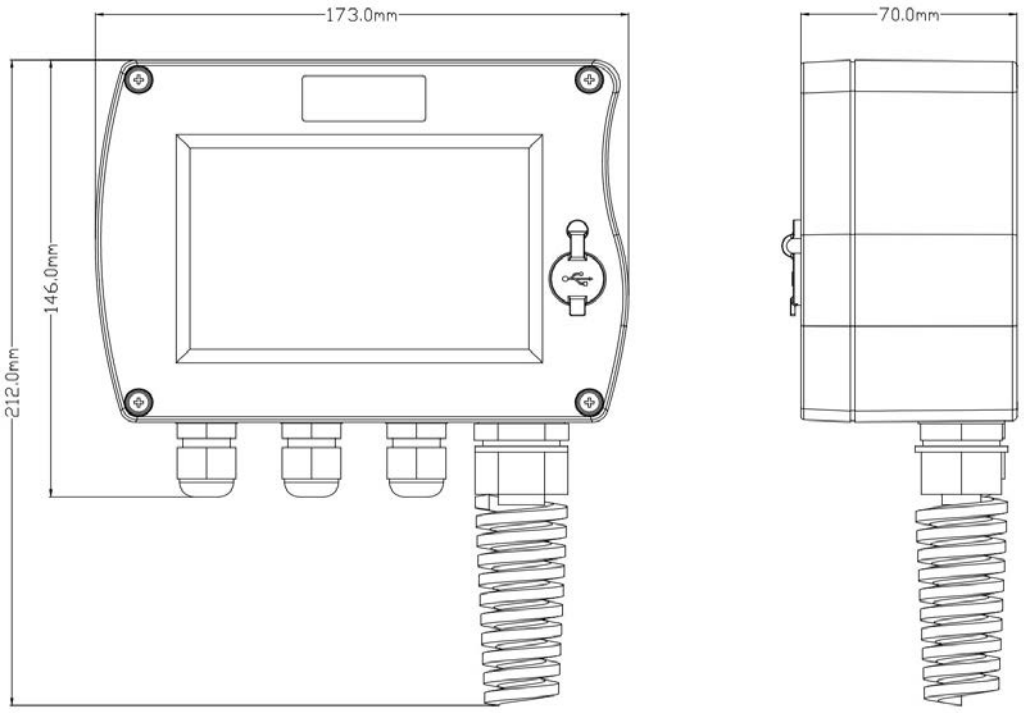

Wall mounting instruction:

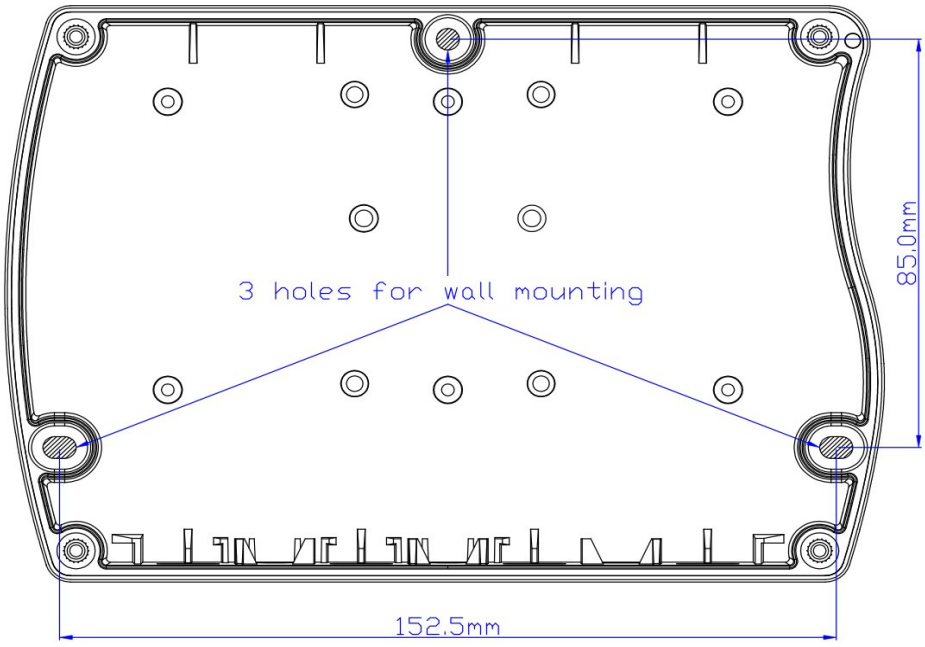

6.2.1.2 Panel Mounting

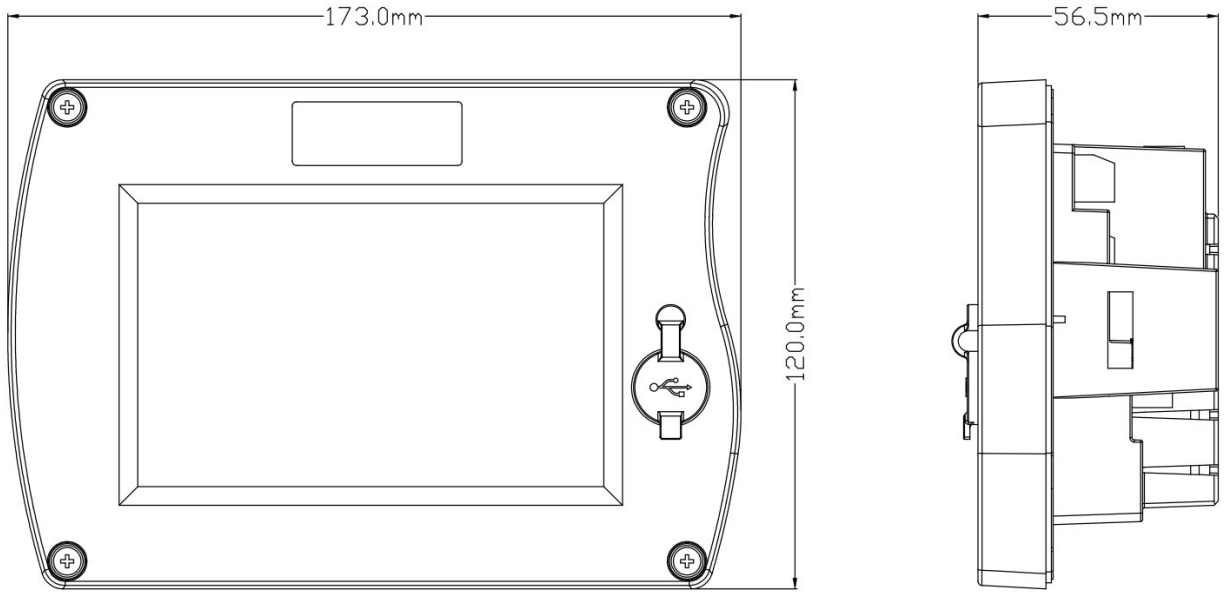

Panel cut size:

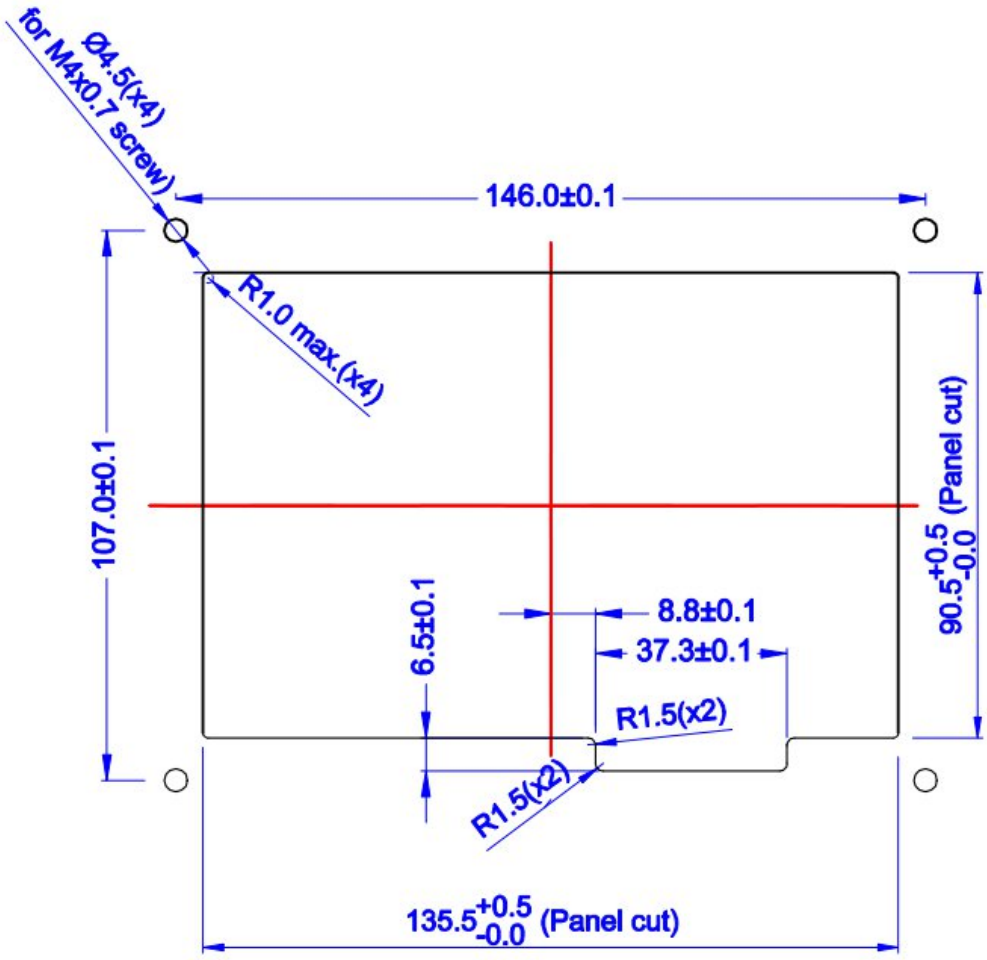

6.3 Install Flex S331

The flex version only supports wall mounting.

Dimensional drawing:

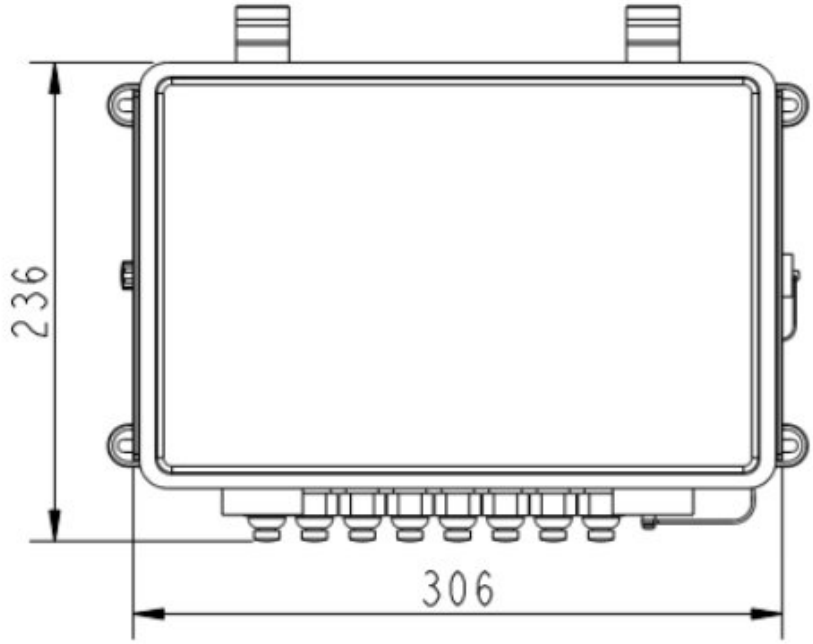

Wall mounting instruction:

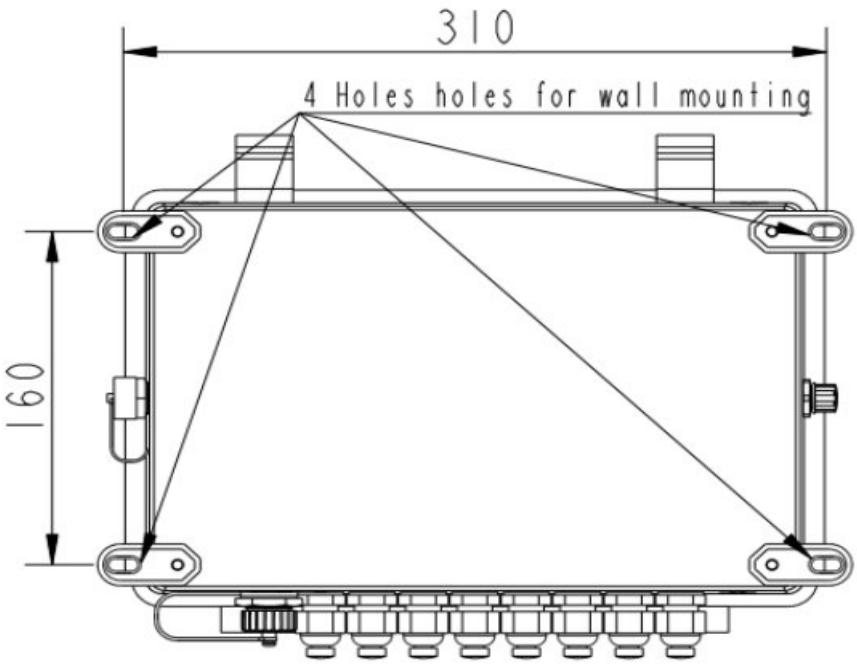

7 Overview of Setting and Operation of S330/S331

The S331/S330 cannot automatically identify connected sensors. You need to use the S4C-Display software to configure sensors. After the sensors are configured using the S4C-Display software, you can change settings of connected sensors using the touchscreen of the S330/S331. The figure below describes the general procedure.

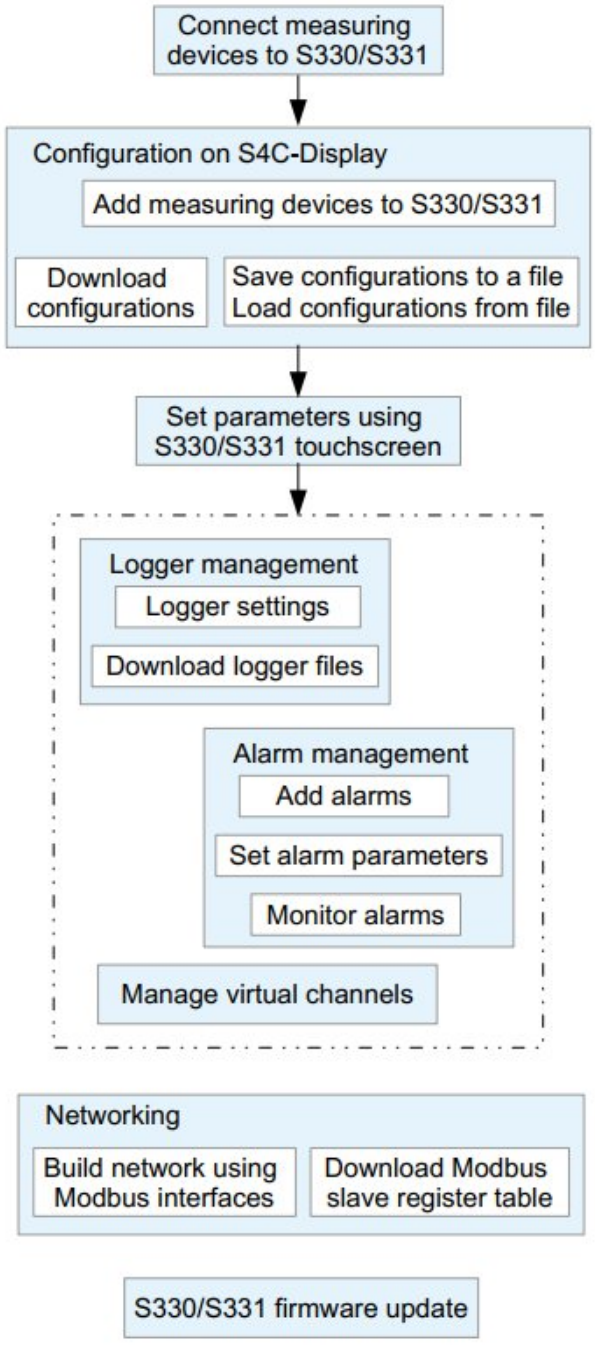

	Connecting measuring devices to the S330/S331 is described in chapter 8.
	Operation on the S4C-Diaplsy is described in chapter 9.
	Setting parameters using touchscreen is described in chapter 10.
	Logger settings are described in section 10.7. Logger files/screenshots can be exported using S4A or S331 touchscreen; see chapter 11.
	Alarm management is described in section 10.6.
	Managing virtual channels is described in section 14.1.
	Monitoring and connections to software are described in chapter 12.
	Procedure of S330/S331 firmware update is described in chapter 15.

8 Electronic Connection

8.1 Terminals Introduction

The terminals A, B, C, D, E, F, G, H, and I on the back of the S330/S331 are used as inputs and/or outputs for various signals, power supply, or alarm contacts.
This section describes the function and pin assignments of each terminal.
Note: Terminals E and F are only available if the analog option A1662 has been ordered.

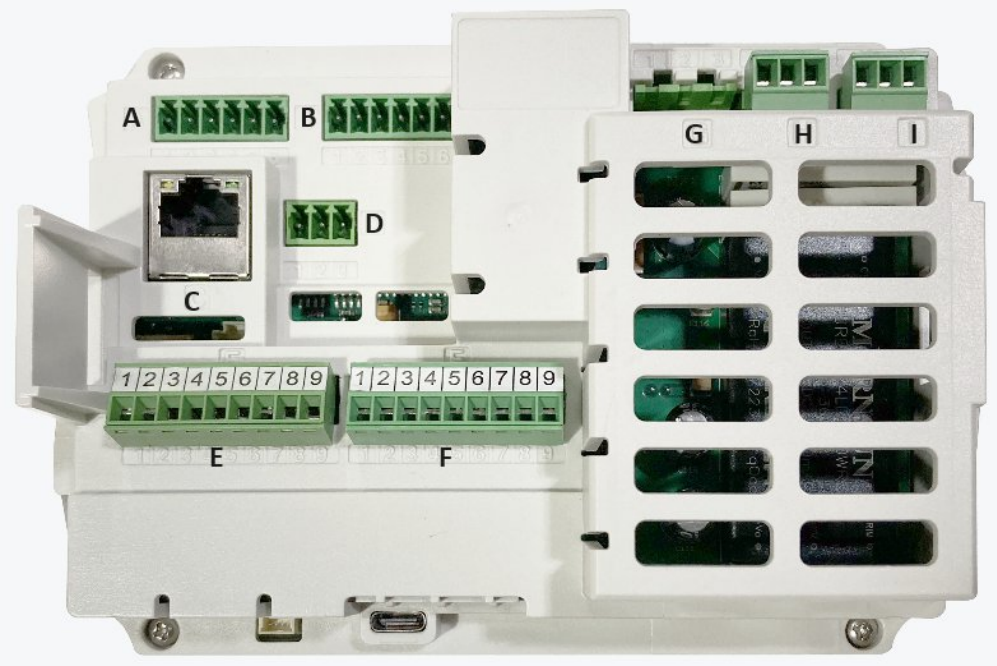

A	: Input for digital sensors (1 x SDI + Modbus/RTU)	
B	: Input for digital sensors (1 x SDI + Modbus/RTU)	
C	: Ethernet	
D	: RS-485, to connect S330/S331 to a Modbus master (Modbus/RTU)	
E	: Input for analog sensors (1 x analog + 1 x pulse)	Option A1662
F	: Input for analog sensors (1 x analog + 1 x pulse)	
G	: Power supply	
H	: Relay output	
I	: Relay output	

Note: The +Vb and -Vb pins on the A, B, E, and F terminals are only applicable to the compact version to power the connected sensors. Sensors connected to the Flex S331 are powered by two power output terminals on the power distribution board. See section 8.2.2 for details.

A USB port and an M12 connector are available on each side panel separately for the flex version.



The M12 connector is used to connect the 4G modem.



The USB port is used to connect to a USB stick or USB cable to update FW or transfer data.

8.1.1 Digital Inputs

The terminals A and B are used to connect SDI and Modbus/RTU sensors to the S330/S331.

In total you can connect:

- 2 SDI Sensors
- 16 Modbus/RTU Sensors

Even if the terminal is used for the SDI, still the same terminal can be used to connect Modbus/RTU sensors. In this case, an external power supply is required for compact S330/S331. Details on that can be found in section 8.2.6 Connect Devices to Terminal A and B via Modbus.

Pin assignments of the terminal A/B are described in the table below:

Terminal	Pin	Signal	Description
A/B	1	SDI	Digital communication signal from a sensor
	2	$-V_b$	Negative sensor supply
	3	$+V_b$	Positive sensor supply (24 VDC)
	4	D+	Modbus/RTU sensor input (Data+ Signal)

	5	D-	Modbus/RTU sensor input (Data- Signal)
	6	GND	GND for Modbus/RTU sensor communication

8.1.2 Analog Inputs (Option A1662)

The terminals E and F provide two optional analog / pulse inputs. In total you can connect:

- 2 x analog sensors (0 ... 20 mA / 4 ... 20 mA / 0 ... 10 V)
- 2 x pulse sensors

Pin assignments of terminals E and F are described in the table below.

Terminal	Pin	Signal	Description
E/F	1	N/A	Not used
	2	+E	Positive voltage input (0 … 10 V)
	3	-E	Negative voltage input (0 … 10 V)
		-I	Negative analog signal (0 … 20 mA / 4… 20 mA)
	4	N/A	Not used
	5	+I	Positive analog signal (0… 20 mA / 4… 20 mA)
	6	P+	Positive pulse input
	7	P-	Negative pulse input
	8	$-V_b$	Negative sensor supply
	9	$+V_b$	Positive sensor supply (24 VDC)

Details on that can be found in section 8.2.7.

8.1.3 Analog / Pulse Output

The 4 ... 20 mA signals and pulse signal of sensors can be looped through the S330/S331 by using the connection board (A554 3313). See 8.2.9 for more information.

8.1.4 Alarm Output

8.1.4.1 Integrated Alarm Relay

The terminals H and I provide two alarm relay outputs (230 VAC, 3 A).

Terminal	Pin	Signal	Description
H/I	1	NC	Normally closed (closed when no power is supplied to the S330/S331.)
	2	COM	Common ground
	3	NO	Normally open (open when no power is supplied to the S330/S331.)

See the table below for the relay states.

State	Signal NC to COM	Signal NO to COM	Symbol
The S330/S331 is powered off.	Closed	Open	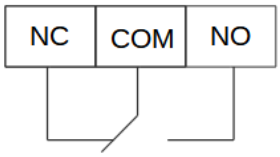
The S330/S331 is powered on.	Open	Closed	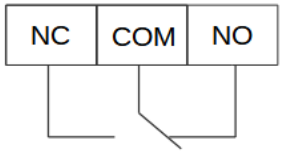
The alarm is activated. (set alarm threshold reached)	Closed	Open	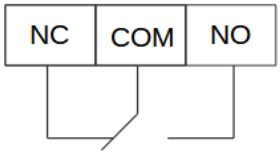

Notes:

- When the S330/S331 is powered on, relays will be activated. That means:
  - NC-COM will open when the S330/S331 is powered on.
  - NO-COM will close when the S330/S331 is powered on.
- When an alarm is activated (only when the S330/S331 is powered on), relays will be activated. That means:
  - NC-COM will close when the alarm threshold is reached.
  - NO-COM will open when the alarm threshold is reached.

Examples:

- If an external device should be powered in case of alarm, connect the device to the NC-COM signal.

- If an external device should be deactivated in case of alarm, connect it to the NO-COM signal.

Connection examples:

1. Alarm LED/Buzzer with using a separated AC power supply.

LED/buzzer is activated if the alarm is activated or S330 power is off.

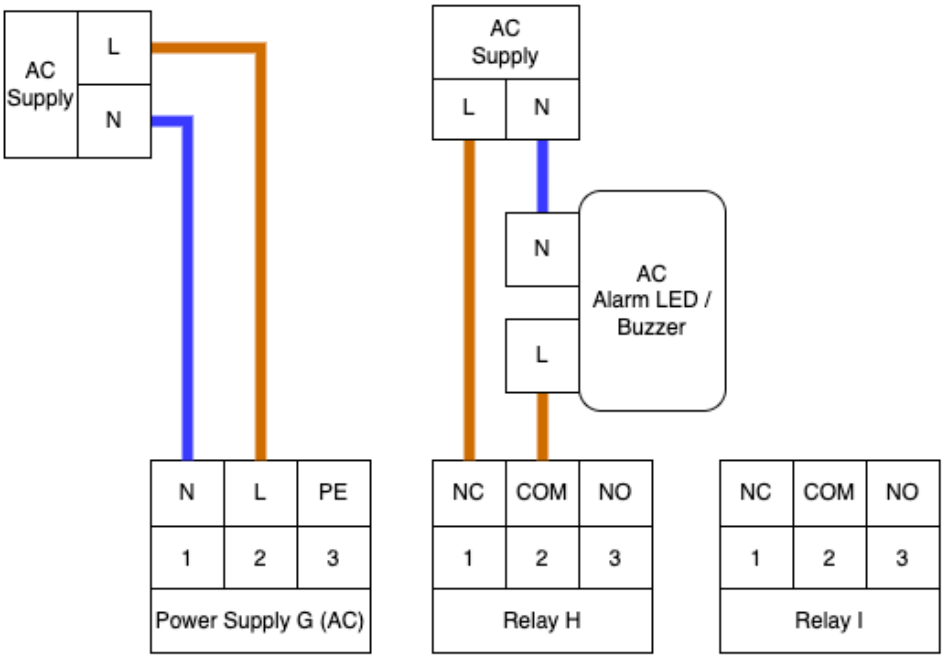

2. Alarm LED/Buzzer with using the same AC power supply as the S330.

LED/buzzer is activated if the alarm is activated or the S330 power is off.

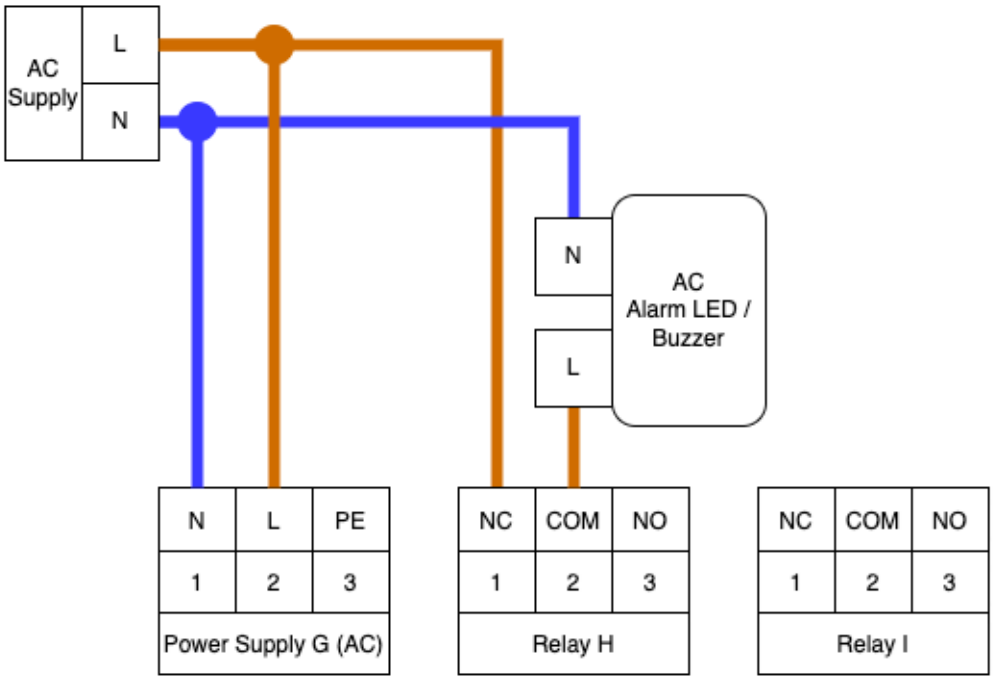

8.1.4.2 External Alarm Relay Module

An optional 8-channel relay module (A1510) is available with the following contact rating:

0.5 A @ 120 VAC	1 A @ 30 VDC
0.25 A @ 240 VAC	0.3 A @ 110 VDC

The module comes with a Modbus interface, which can connect with the S330/S331.

8.1.5 Data Interface

The terminals C and D are data interfaces.

- The connector C is an Ethernet connector used for transmitting data via the local network (SUTO-Bus, Modbus/TCP, Web Server).
- The connector D is an RS-485 output used to connect the S330/S331 as a slave to a Modbus/RTU master.

Pin assignments of the terminal D are described in the table below.

Terminal	Pin	Signal	Description
D	1	D+	Modbus output (Data+)
	2	D-	Modbus output (Data-)
	3	GND	GND for Modbus

The terminal C is a standard Ethernet port (RJ-45).

For networking, see chapter 12.

8.2 Connect S330/S331 to External Devices

8.2.1 Connect compact S330/S331 to Power Supply

The compact S330/S331 can be powered by AC power (A1663) or DC power (A1664).

AC pin assignment (A1663):

Terminal	Pin	Signal	Description
G (AC)	1	N	Neutral connector (AC)
	2	L	Life connector (AC)
	3	PE	Protection earth

DC pin assignment (A1664):

Terminal	Pin	Signal	Description
G (DC)	1	$-V_b$	Negative power supply (DC)
	2	$+V_b$	Positive power supply (DC)
	3	PE	Protection Earth

Connection of the G terminal of the S330/S331 to the AC or DC:

AC power connection

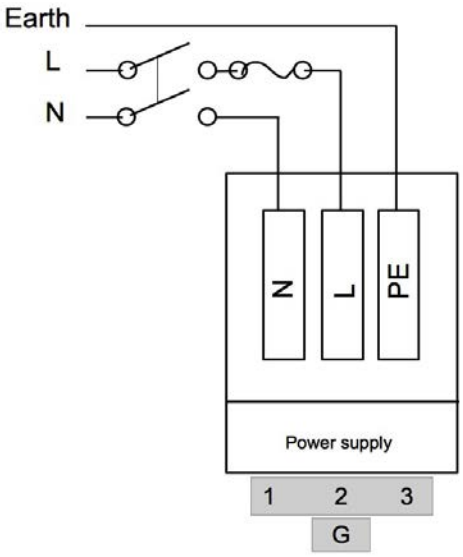

DC power connection

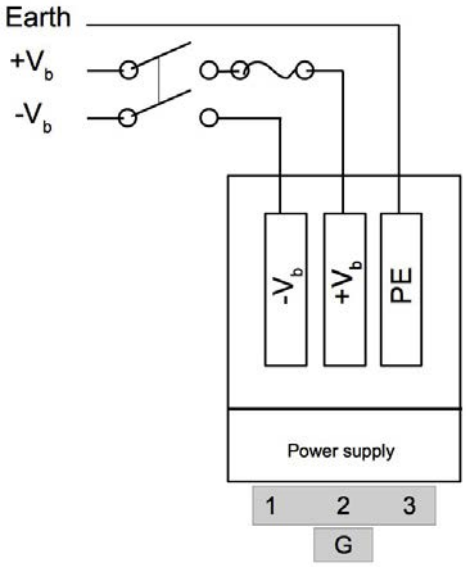



ATTENTION!

Always connect to the earth (PE)!

When earth connection is missing, conductive components may carry supply voltage. Touching of such parts leads to an electrical shock which can lead to serious injuries or even death!

8.2.2 Connect flex S331 to Power Supply

The flex S331 can be powered by AC power (A1676) or DC power (A1677). The flex S331 comes with a power distribution board. The terminal G has been connected to the power distribution board before delivery. You need to connect an external power supply to the power distribution board. Its product picture and wiring diagram are as follows.

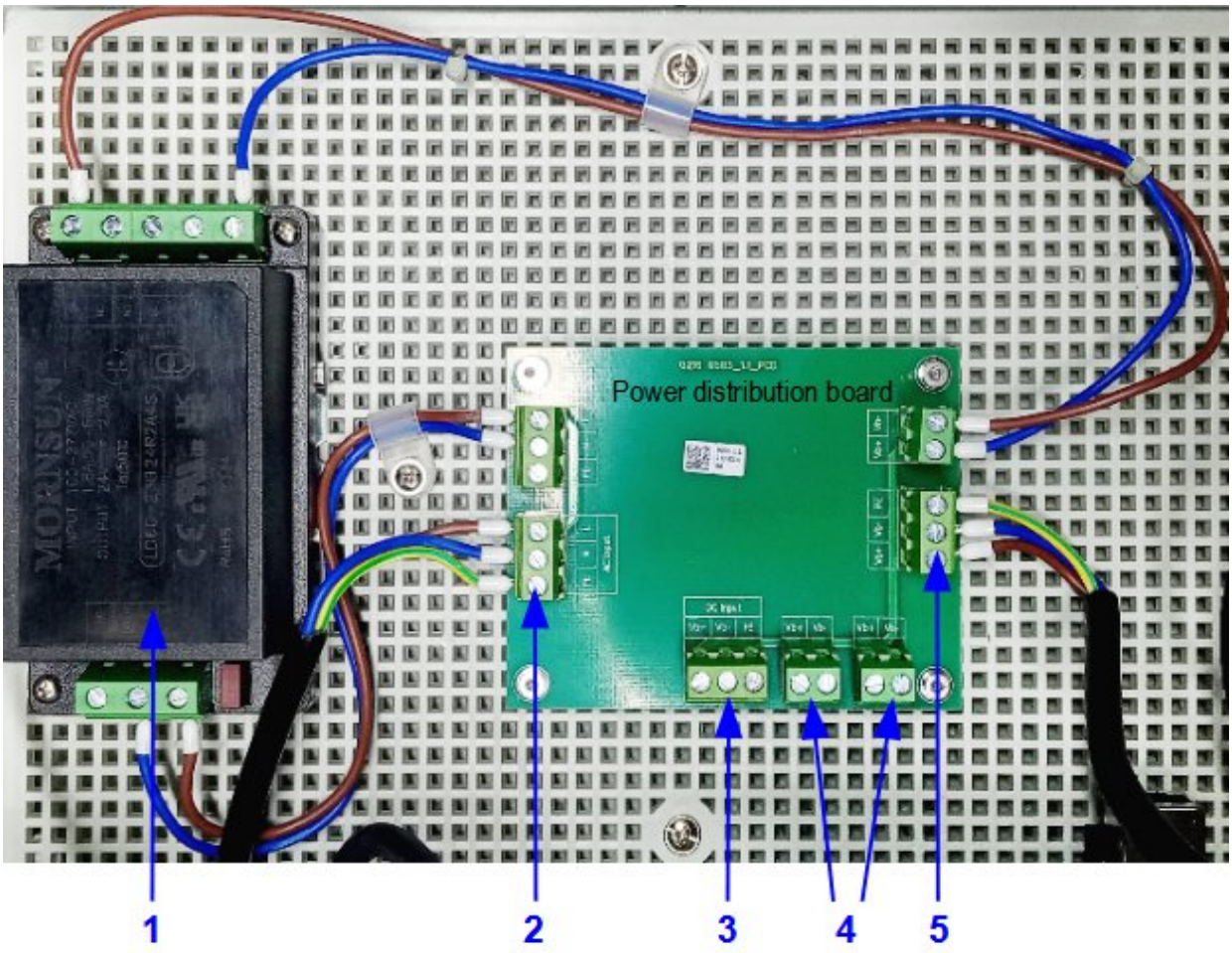

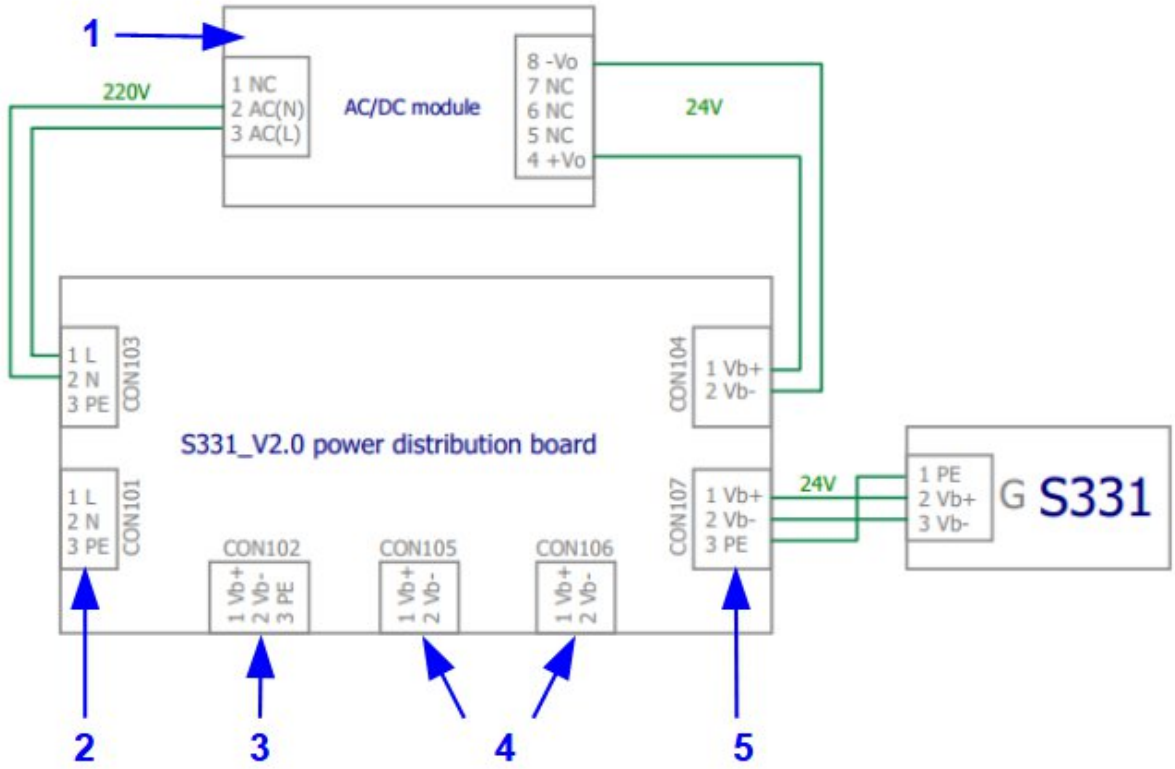

1	AC to DC converter	This is only available when the flex S331 uses the AC power (A1676) option.
2	AC input	Connect it to the external AC power when the flex S331 uses the AC power (A1676) option.
3	DC input	Connect it to the external DC power (60 W) when the flex S331 uses the DC power (A1677) option.
4	DC output for sensors	Provides DC power supply for sensors that connect with the flex S331. For details, see section 8.2.3 Power Supply for Connected Sensors.
5	DC output for S331	Provides DC for the S331. This terminal has connected to the terminal G at factory.

Pin assignment of ports on the power distribution board

Terminal	Pin	Signal	Description
AC input (CON101)	1	L	Life connector (AC)
	2	N	Neutral connector (AC)
	3	PE	Protection earth
DC output for sensors (CON105, CON106)	1	+Vb	Positive power supply (DC)
	2	-Vb	Negative power supply (DC)

DC input (CON102)	1	+Vb	Positive power supply (DC)
	2	-Vb	Negative power supply (DC)
	3	PE	Protection earth

8.2.3 Power Supply for Connected Sensors

The S330/S331 can power connected sensors.

For the S330/S331 Compact Version, a total power output of 10 watts can be drawn for connected sensors from terminals A, B, and E, F (optional).

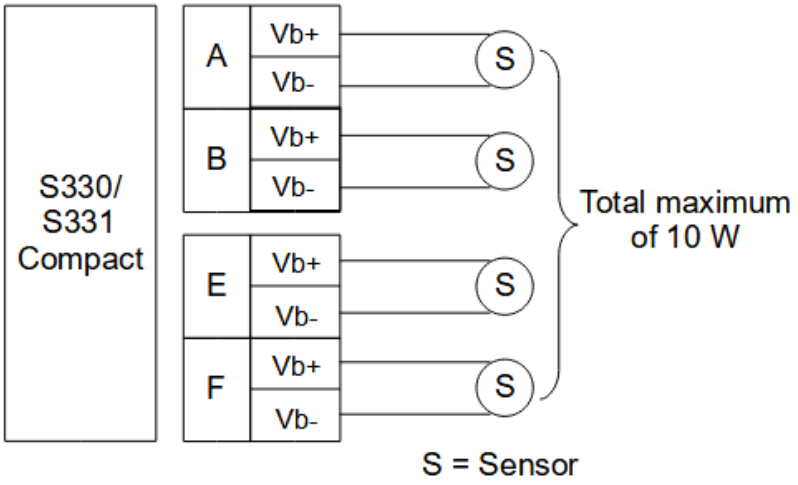

For the S331 Flex Version, a total power output of 10 watts can be drawn for connected sensors from terminals A, B, and E, F (optional).

If the power consumption of the connected sensors exceeds 10 watts, you can use terminals CON105 and CON106 on the power distribution board to power the sensors.

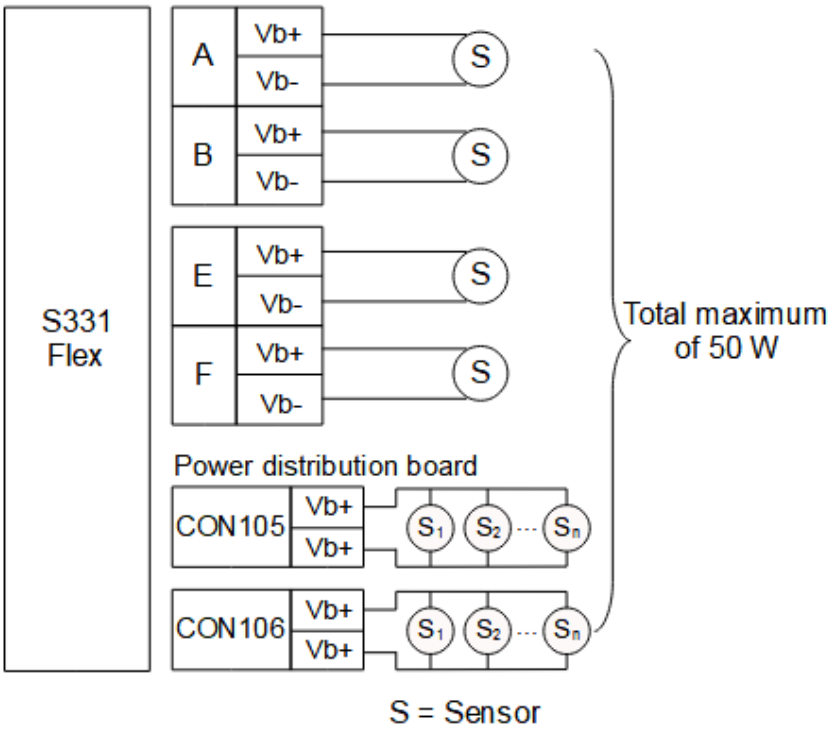

8.2.4 Connect External Alarm Units

Terminals H and I on the S330/S331 back panel are used to connect the external alarm unit. For detailed connections, see section 8.1.4.1 Integrated Alarm Relay.

In addition, an optional 8-channel relay module (A1510) is available. The example below shows a DC alarm unit connects with the relay module through the Modbus interface.

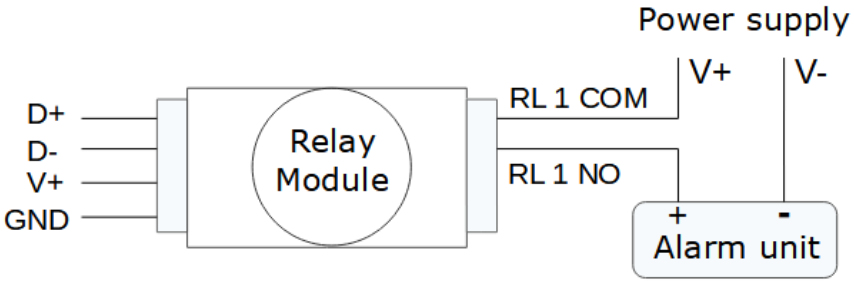

Using the relay module requires to update the S330/S331 FW to the V2.13 / V1.91 or later version, and install the V1.5.84 or later version of the S4C-Display to configure this optional relay module.

The S330/S331 firmware has 2 kinds file name suffixes:

- When the firmware is v1.9x, the file suffix is .tar.
- When the firmware is v2.xx, the file suffix is .suto.

Note: The v1.9x version cannot be upgraded to v2.xx, and vice versa.

8.2.5 Connect Devices to Terminals A and B via SDI

S330/S331			S401/ S421/ S430	S450 / S452	S211/ S215 /S220 *	Color
Terminal	**Pin**	**Signal**	**Pin**	**Pin**	**Pin**	
A / B	1	SDI	A.1	4	1	brown
	2	$-V_b$	A.2	3	2	white
	3	$+V_b$	A.3	2	3	blue

* The S211/S215/S220 **with Modbus/RTU** interface do not support this SDI connection.

8.2.6 Connect Devices to Terminal A and B via Modbus

In this case, the S330/S331 acts as a Modbus master.

S330/S331			S230 S231	S220 S211 S215	S401 S421 S430	S120	Color
Terminal	**Pin**	**Signal**	**Pin**	**Pin**	**Pin**	**Pin**	
A / B	2	$-V_b$	2	A.2	B.2	A.2 / B.2	white
	3	$+V_b$	3	A.3	B.3	A.3 / B.3	blue
	4	D+	4	A.4	B.4	A.4 / C.4	black
	5	D-	5	A.5	B.5	A.5 / C.5	grey
	6	GND	6	N/A	B.1	B.1	brown

The termination resistor is software controlled and can be enabled or disabled using the communication menu.

A Modbus connection requires a termination resistor at both ends of the lines in most of the cases. Please follow the standard Modbus (RS-485) connections as described below or as described in the Modbus standard.

In total 16 Modbus slaves can be connected to the S330/S331. If more than 4 devices are connected in total, please connect all Modbus slaves to either Terminal A or B using a daisy chain. Do not split them up between A and B.

8.2.6.1 Modbus/RTU Cable Length

A Modbus/RTU bus line has limitations which shall not be exceeded, otherwise the communication might not be stable.

- The maximum total bus length must not exceed 1200 m.
- The stub length to each node must not exceed 30 cm.

See the picture below for details.

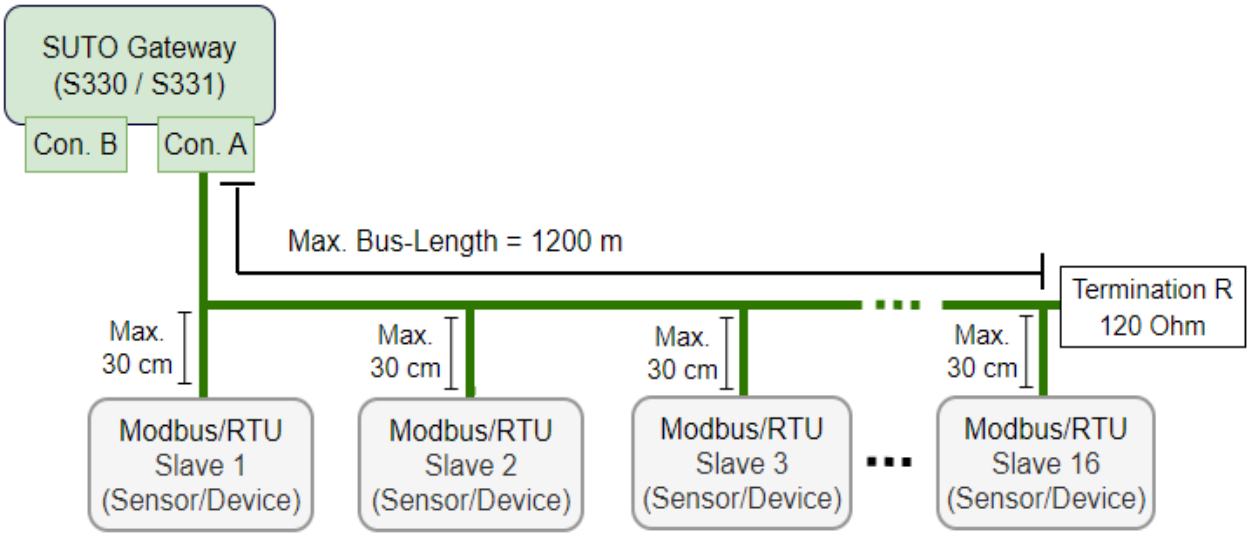

8.2.6.2 Modbus/RTU Wiring and Cable Type

To ensure a stable communication a twisted-pair bus cable must be chosen to set up the Modbus/RTU communication.

- Bus-cable specifications must follow the EIA485 Standard, must be twisted pair and shielded, for example 2 x 2 x 0.22 mm^2, Li-2YCY (A553 0123).
- The shield must be connected at one end to the master GND connection.
- At the end of the bus, a 120 Ohm resistor should be placed a termination resistor.

See the below picture for details.

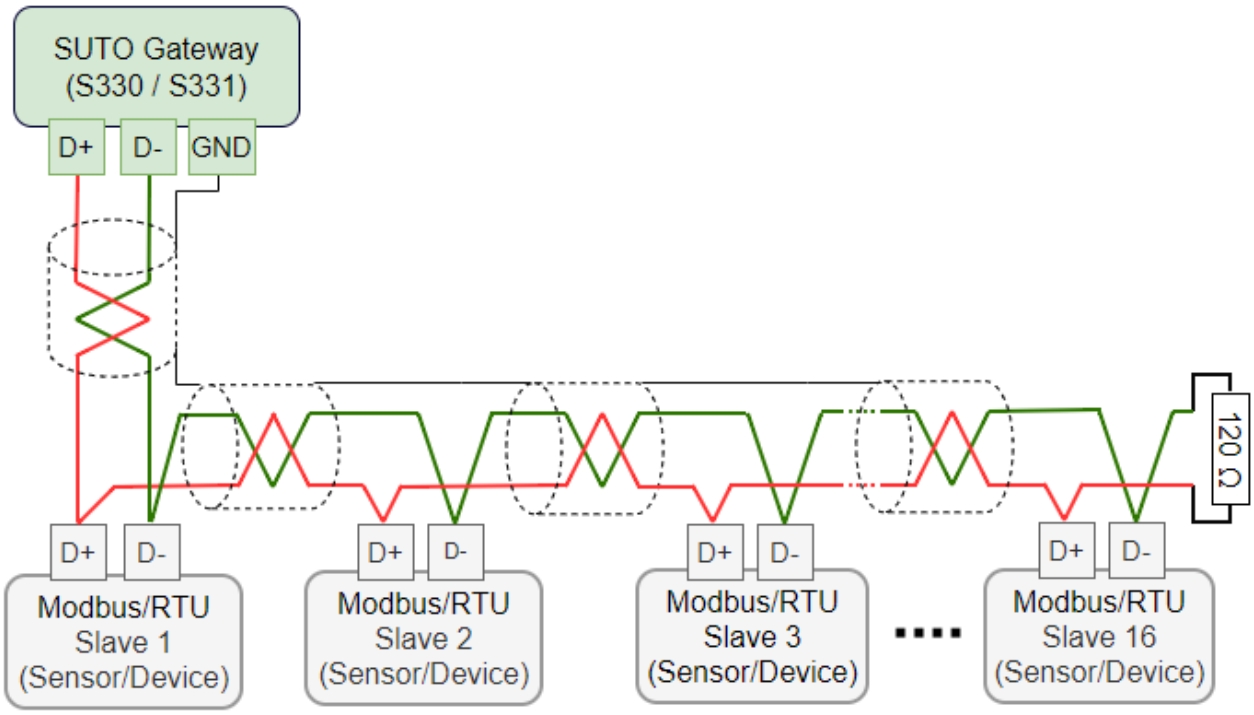

8.2.6.3 Daisy-Chain using RS-485 Splitter

SUTO devices with M12 connectors can be easily connected in a Modbus/RTU daisy-chain using an M12 RS-485 splitter (A554 3310). Furthermore this allows to easily place the M12 termination resistor (C219 0055) at the last splitter in the bus-chain.

See example below for reference.

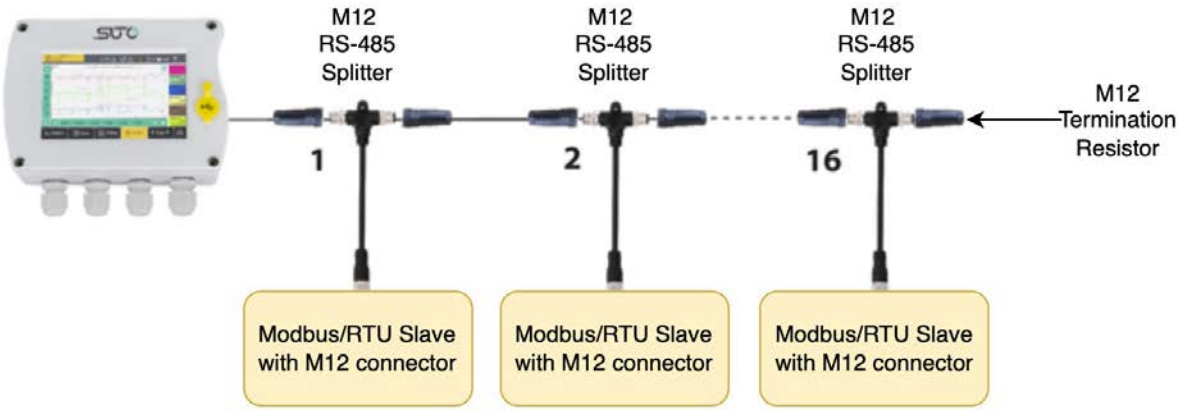

To connect the SUTO devices with M8 connectors to the daisy-chain, the RS-485 splitter (A554 3310), the M8 to M12 converter cable (A553 0161), and the termination resistor (C219 0055) are needed. See the example below for reference.

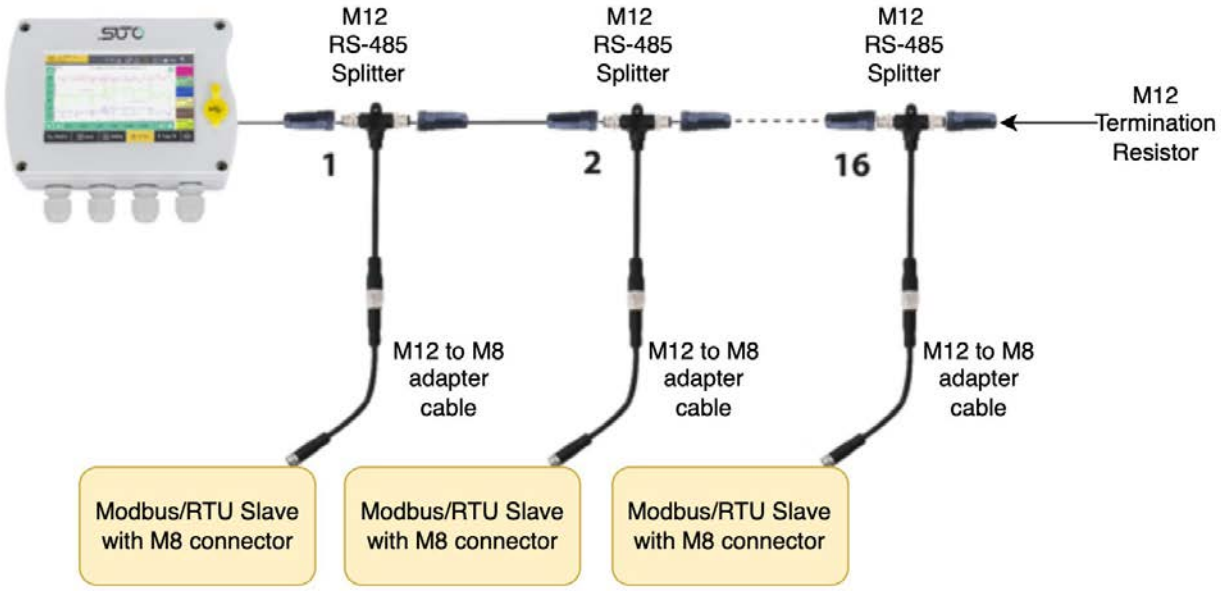

Notes:

- The S330/S331 can provide a maximum of 10 W (compact) or 50 W (flex) power for the connected sensors. If more power is needed, a separate power supply is required.
- At the end of the bus line, the termination resistor of 120 Ohm must be placed to avoid interference.
- Avoid a connection of slaves to the master in ring or star topology.

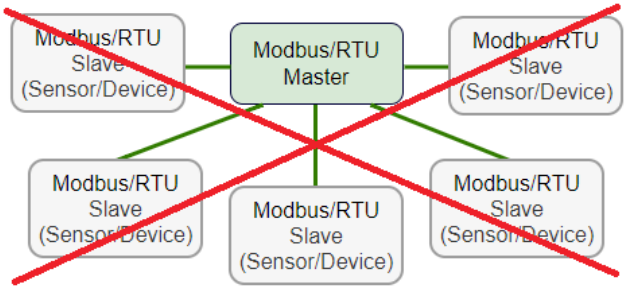

Avoid a star topology

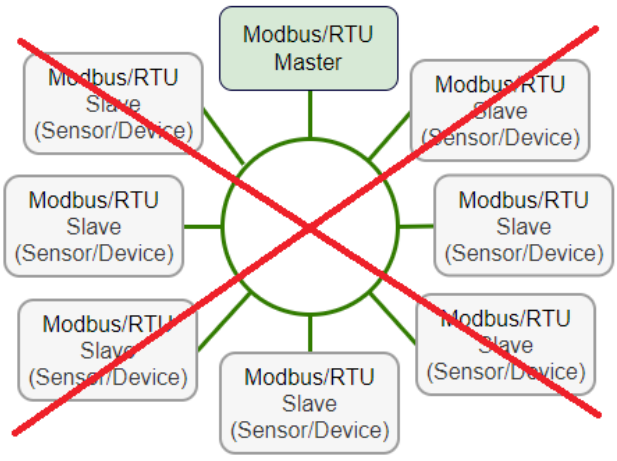

Avoid a ring topology

8.2.7 Connect SUTO Devices to Terminals E and F via Analog/Pulse (A1662 option)

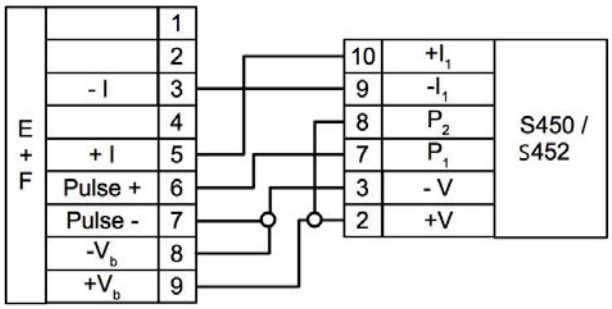

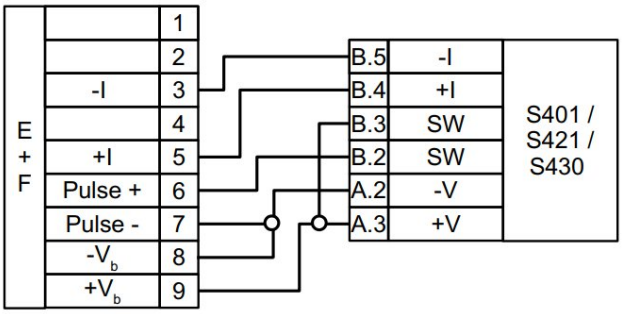

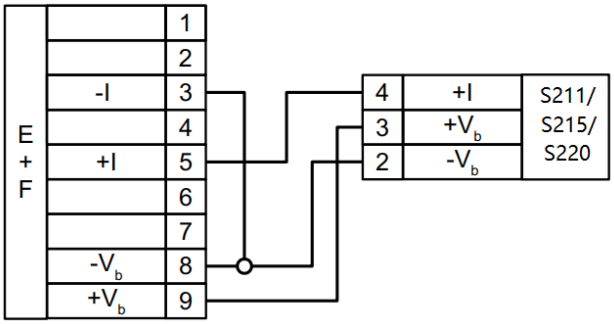

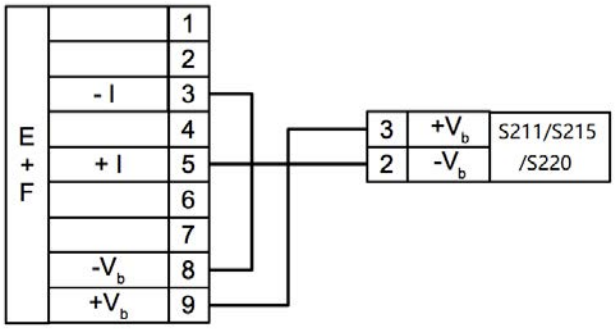

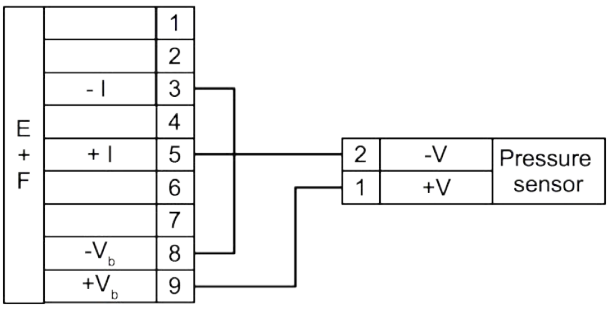

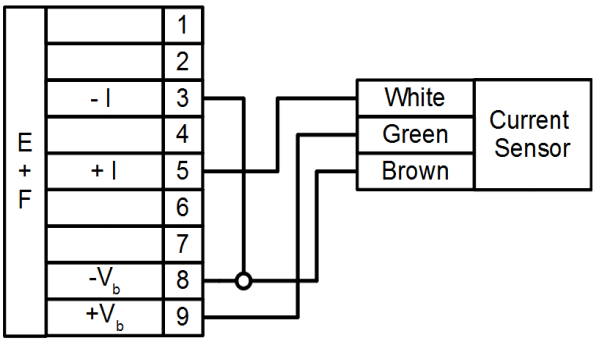

8.2.8 Connect 3rd Party Analog/Pulse devices to Terminals E and F (A1662 Option)

This optional card offers two more inputs at Terminal E and F, which can be used to receive:

- 4 ... 20 mA, 0 ... 10 V analog signal and pulse signal from third-party flow sensors.
- Relay signals from compressors.

A. Process voltage input 0 ... 1 V or 0 … 10 V	**B.** Process voltage input. The sensor is supplied by S330/S331
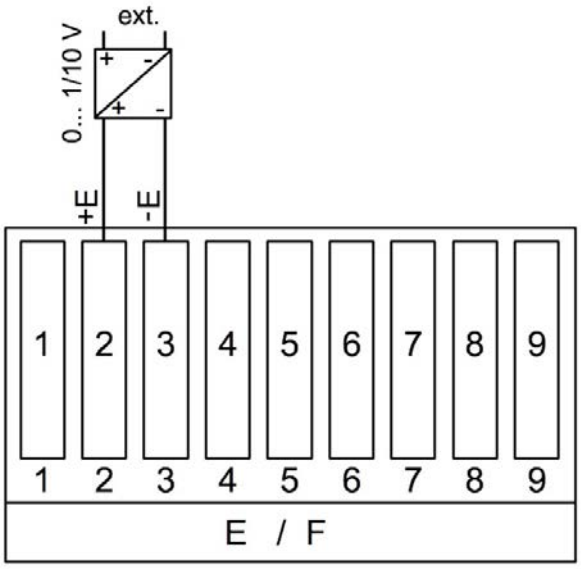	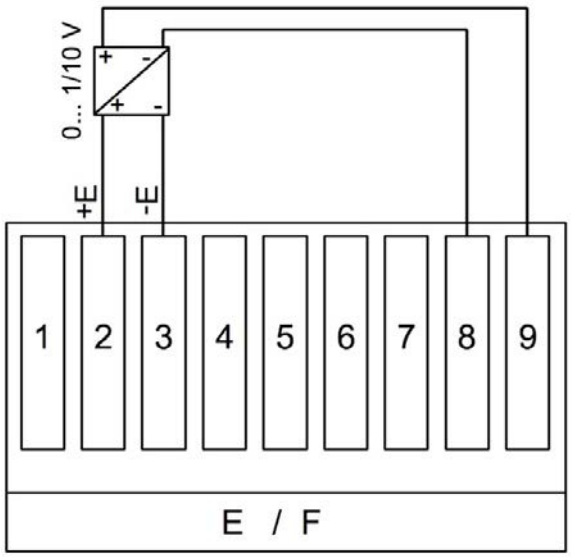

C. Loop current input
0 ... 20 mA / 4 ... 20 mA.

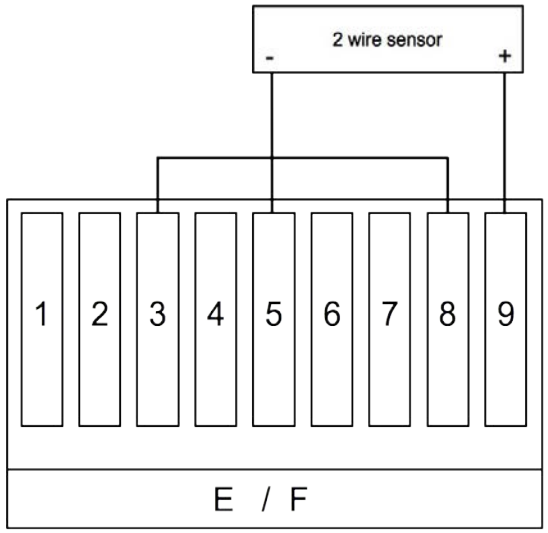

D. Process current input 0 ... 20 mA / 4 ... 20 mA. Sensor is supplied by S330/S331.

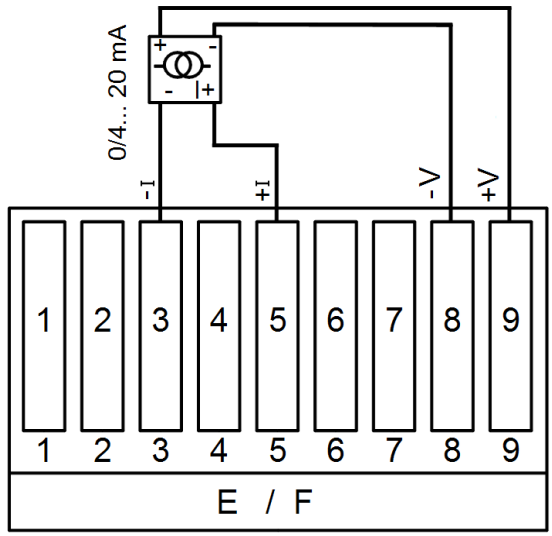

E. Connection of an isolated pulse input from a flow meter or connection of a relay signal from a compressor for monitoring the run time of the compressor (For more details, see section 14.2 .)

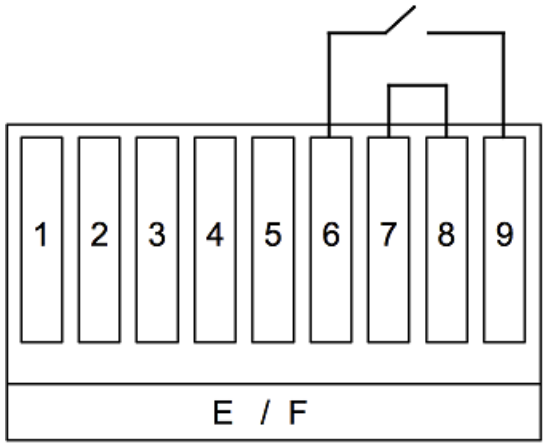

F. Connection of an active pulse signal from a flow meter or connection of a 24 VDC relay signal from a compressor for monitoring the run time of the compressor (For more details, see section 14.2 .)

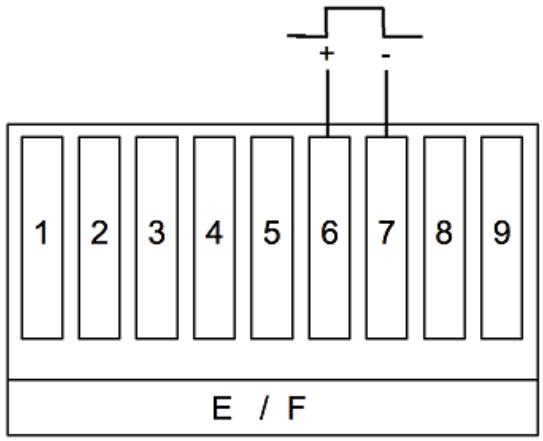

8.2.9 Loop Analog Signals to a PLC (A554 3313)

If a 4 ... 20 mA or pulse signal of a sensor needs to be connected to a PLC or SCADA system, a separated connection board is needed. With the connection board, two 4 ... 20 mA signals and two pulse signals can be looped to the PLC or SCADA system.

For wiring, please refer to the instruction manual of the connection board.

Remarks:

- The S401 / S421 provides isolated analog and pulse outputs also on connector B. Please refer to instructions manual S401 / S421.
- S450 provides isolated pulse and mA signals directly from the sensor.

9 Configuration using S4C-Display Software

Typically the S331/S330 are pre-configured when ordered from SUTO in a set with SUTO devices. In case you need to add devices afterwards or you have ordered the S331/S330 separately, you must configure accordingly.

To do these, the following software and hardware are required:

- S4C-Display Software
- PC with Windows 7 or later
- USB cable to connect the S331/S330 to your PC (included within the S331/S330)

This section introduces how to add various devices to the S330/S331, including the following specific topics:

- Establish communication between S330/S331 and S4C-Display.
- Add an SDI device, an Modbus/RTU slave device, an Analog/Pulse device, and a 3rd party Modbus device to the S330/S331.
- Download configurations to the S330/S331.
- Save configurations in S330/S331 to a file; load configurations from a file to the S330/S331.

9.1 Establish Communication between S330/S331 and S4C-Display

Before adding devices to the S330/S331, communication between the S330/S331 and S4C-Display must be established.

1. Download and install the S4C-Display software on your PC. The software can be downloaded from www.suto-itec.com.
2. Connect the S330 / S331 to your PC, using the supplied USB cable.
3. Start the S4C-Display software.
4. Click **Online Config** to configure the connected S330 / S331.

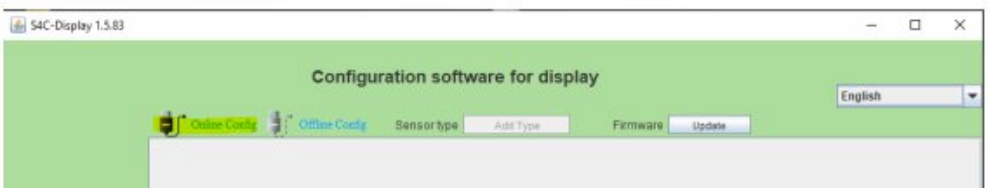

5. Click **Auto Detect** to detect the connected S330 / S331. The detected S330 / S331 will show up in the list.



6. Select the detected S330/S331 and click **Start Config** to start the configuration.

9.2 Add Devices to S330/S331

After devices/sensors are connected to the S330/S331 physically, the S330/S331 cannot detect these devices automatically. You have to add these devices to S330/S331 using the S4C-Display software.

9.2.1 Add an SDI Device to S330/S331

In this example, an S120 is connected to the S330/S331.

Prerequisite: Connect the S120 to terminal A or B on the S330/S331 as described in section 8.2.5 Connect Devices to Terminals A and B via SDI.

On the S4C-Display interface, follow the steps below to add an S120 to the S330/S331.

1. On the left side menu, click **SDI & analog input**. Then select the tab **Terminal A** or **Terminal B** according to where the S120 has been connected.
2. Select S120 from the drop-down box after **Sensor Type**, and add texts in the **Sensor Description** field.

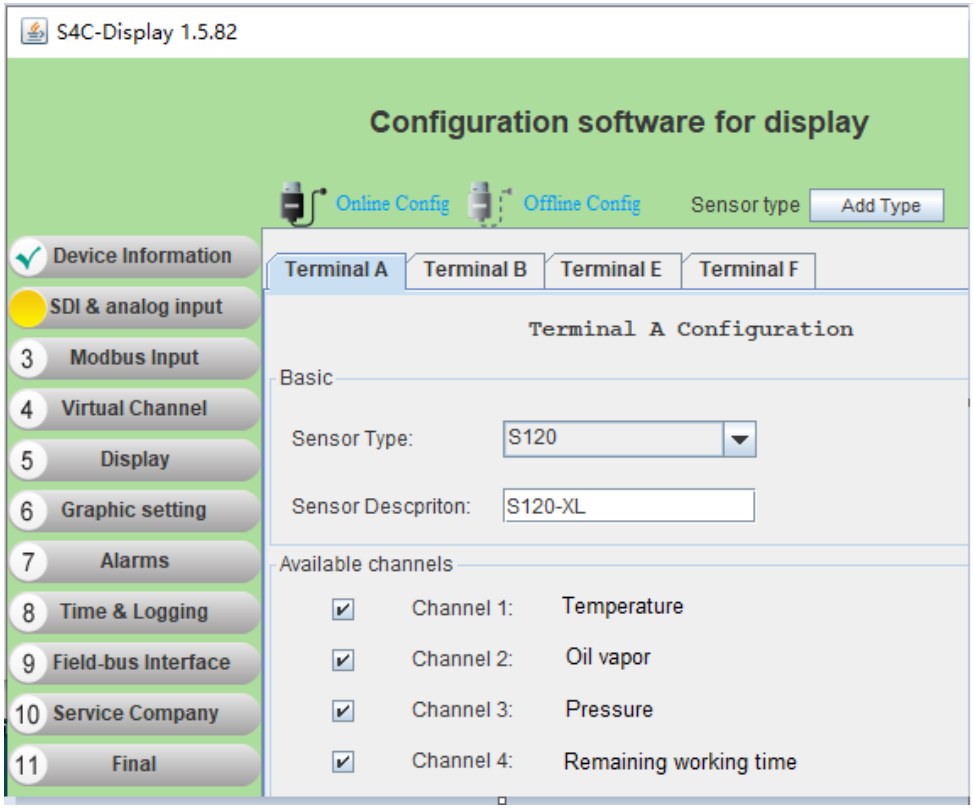

3. Click **Display** from the left side menu to add the S120 to be shown on the S330/S331.

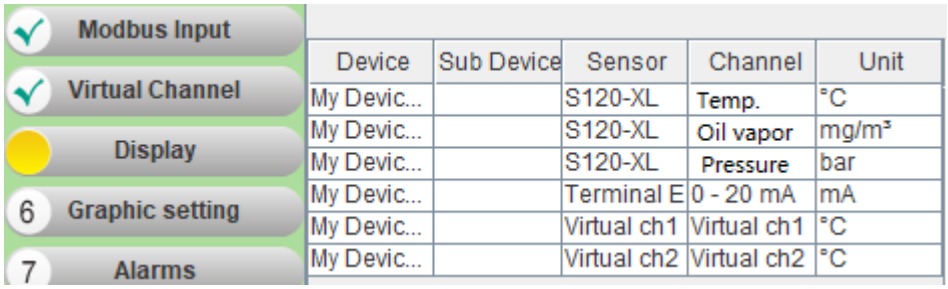

4. Create the location and measuring point.
   To display the device on the S330/S331 screen, you need to have a location and measuring point for it. If not already existing, create new ones as follows:

A. Click **Add location**;
input text for the location;
click **OK**.

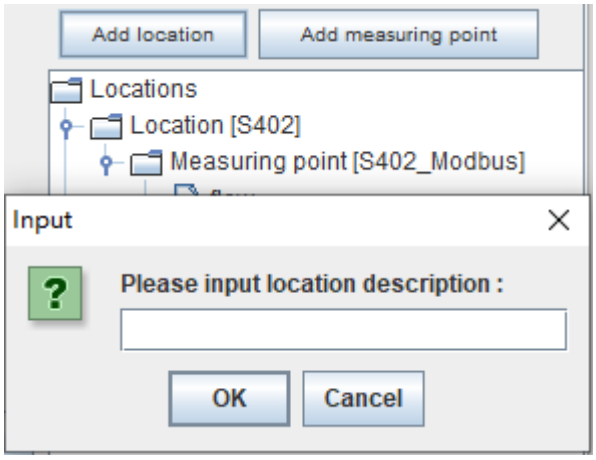

B. Click **Add measuring point**;
input text for the point;
click **OK**.

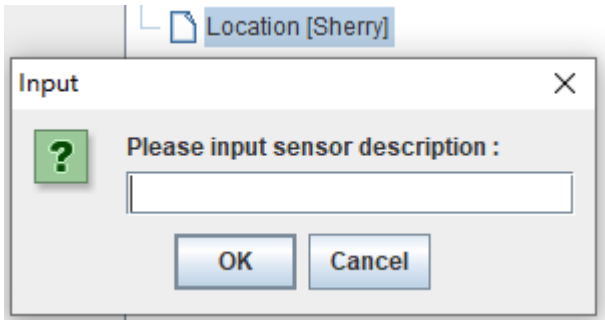

5. Add channels to the location and measuring point:
Select the channels on the left side by marking them.
Then click the arrow **>>** in the middle to add channels to the view.

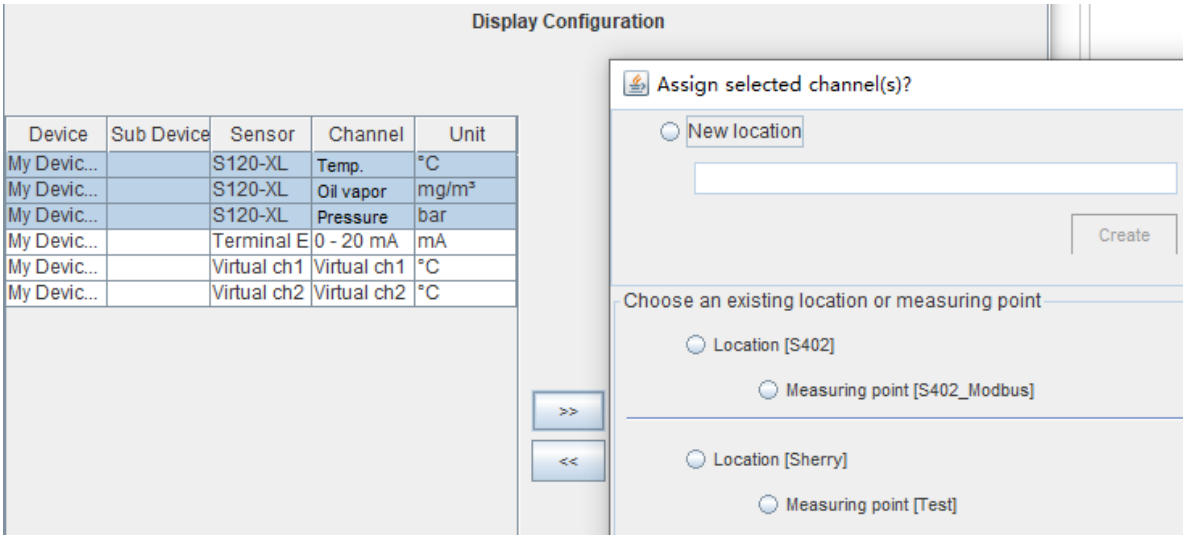

6. Click **Time & Logging** from the left side menu, and tick the channels to be displayed on the S330/S331.

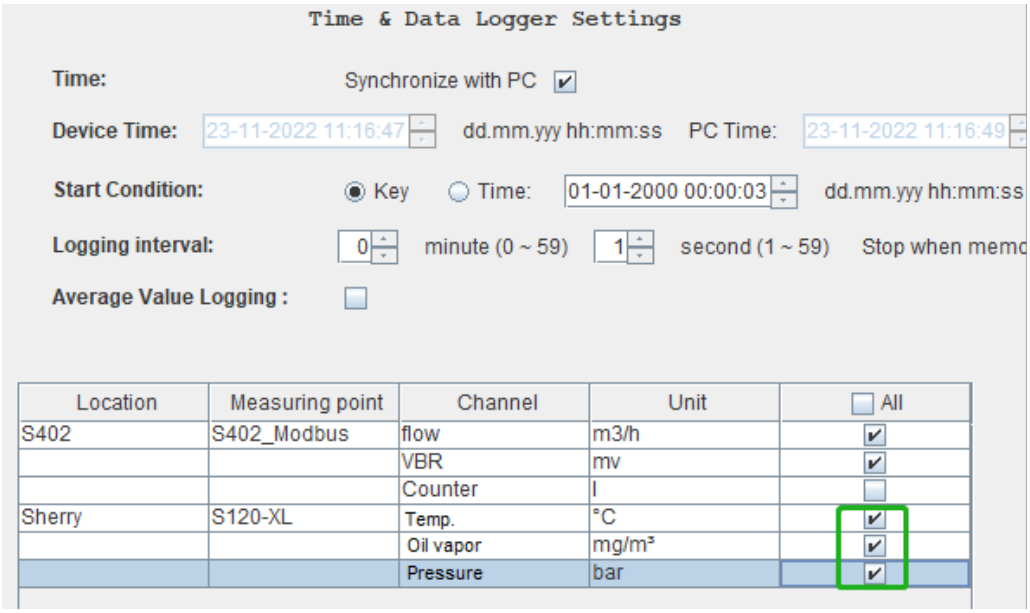

7. Select **Final** from the left, then click **Download Configuration into Device** to download the configuration into the S330/S331.

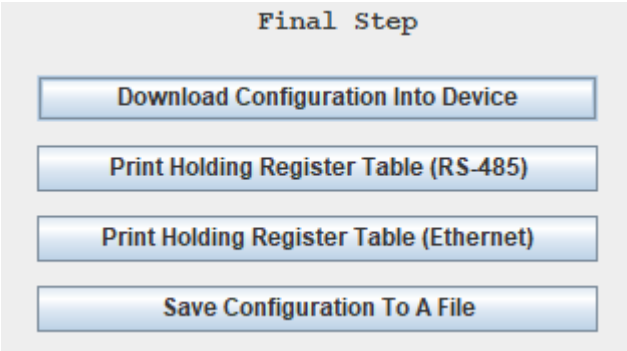

Note: This step can also be done after all devices are added.

9.2.2 Add a SUTO Modbus slave to S330/S331

Take the S401 as an example to add it to the S330/S331 as a Modbus slave.

Prerequisite: Connect the S401 to the terminal A or B on the S330/S331 as described in section 8.2.6 Connect Devices to Terminal A and B via Modbus.

On the S4C-Display interface, follow the steps below to add the S401 to the S330/S331 as a Modbus slave.

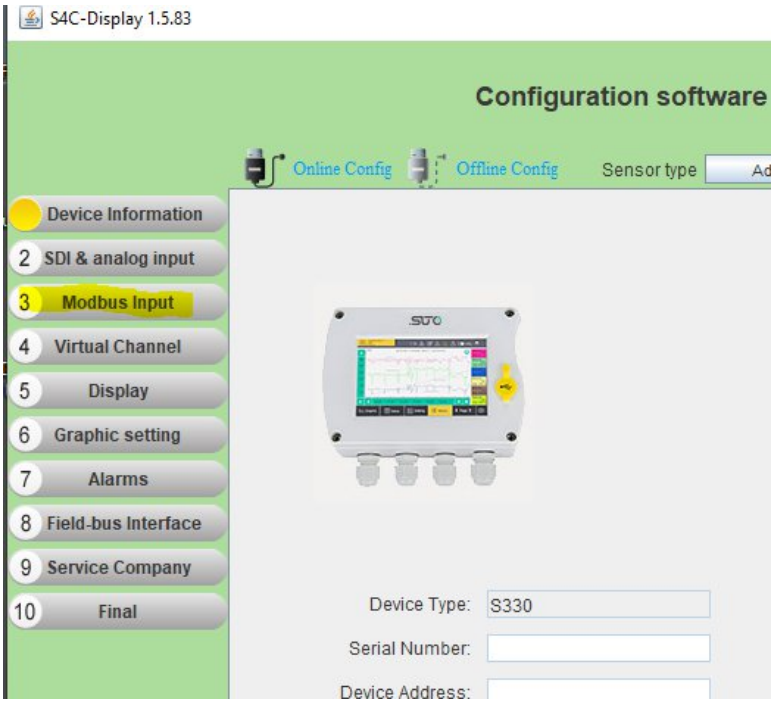

On the left side menu, click **3 Modbus Input** to add a Modbus slave device.

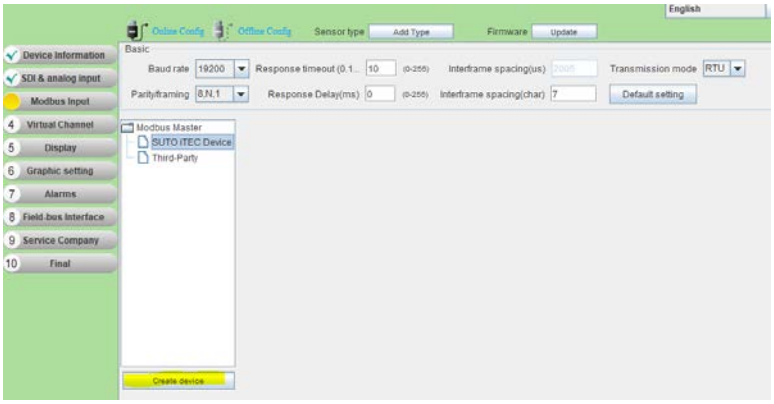

Once open, select **SUTO iTEC Device**, then click **Create Device** in the bottom.

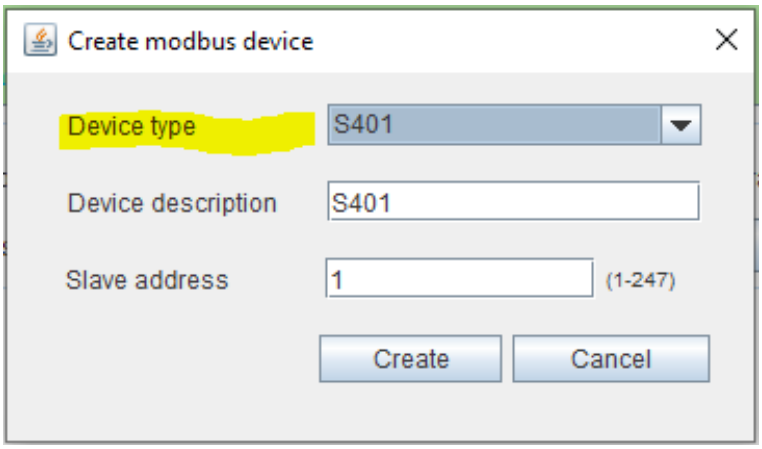

A new pop up is shown. From the **Device Type** dropdown menu, select the device type to be added. In this example, the S401 is selected.

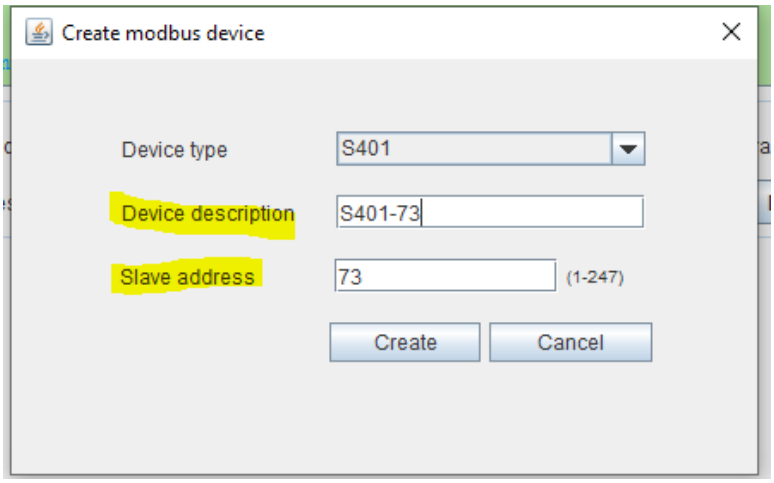

Enter the **Device Description** and the **Slave address** of the device.

For SUTO devices, the salve address is typically the last two digits of the serial number. Please check the label on the device, where the slave address is indicated.

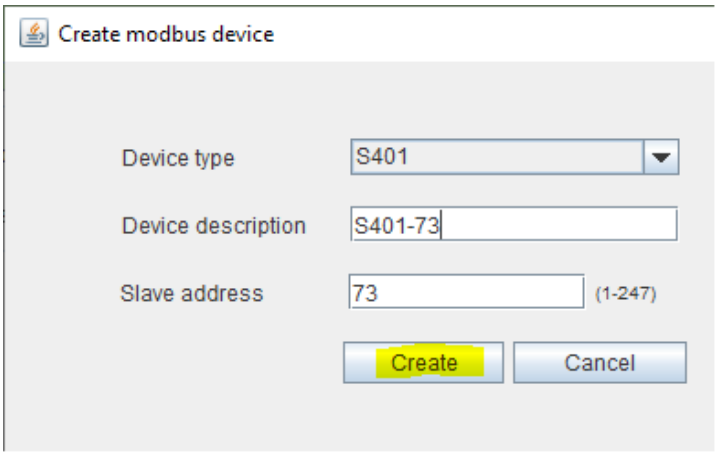

After information is entered click **Create.**

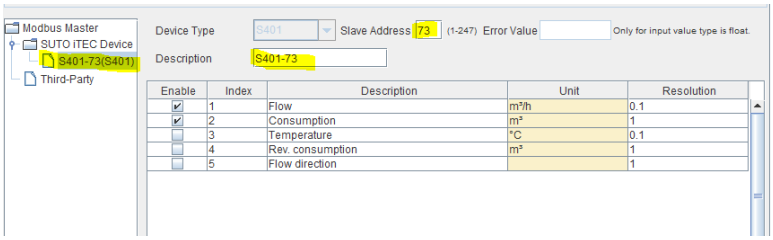

The new created device is now added to the list of connected slaves.

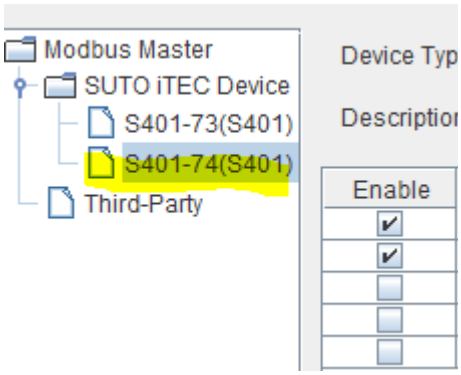

To add another device, repeat the steps above.

After all devices are added, please continue.

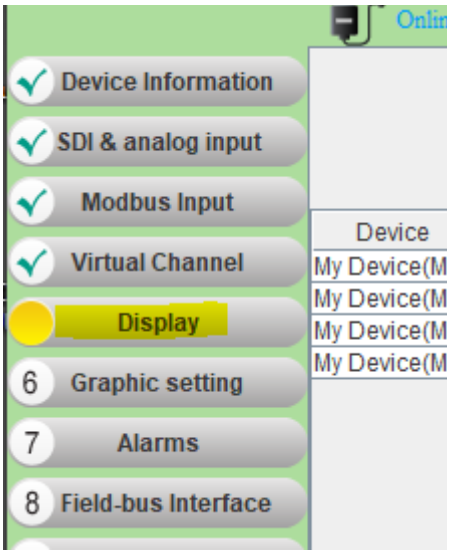

Select **Display** from the left side menu to add the configured devices to be shown on the S330/S331.

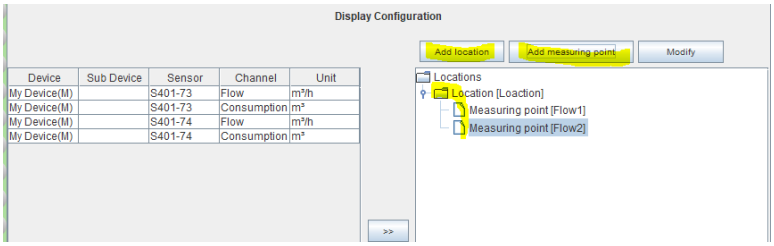

In order to display the devices on the S330/S331 screen, you need to have a Location and Measuring point created.
If not already existing, create new ones as indicated left.

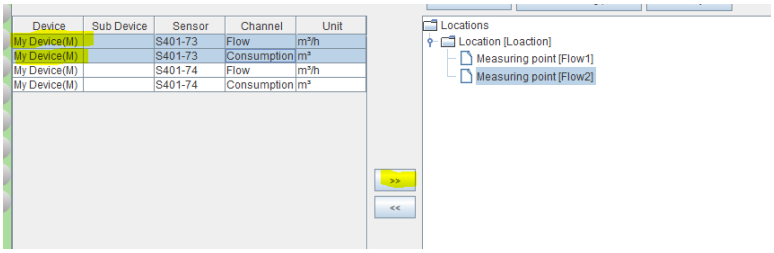

After Measuring points are created you can add the devices.
Therefore select the channel on the left side by marking it.
Then click the arrow **>>** in the middle to add the channels to the view.

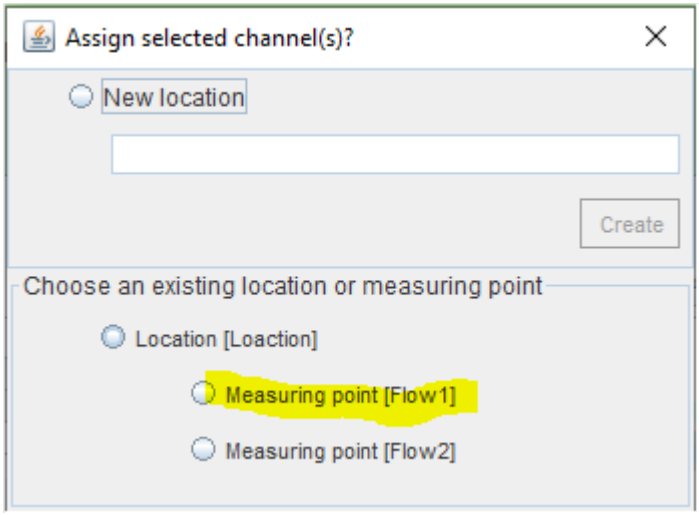

Select the measuring point.

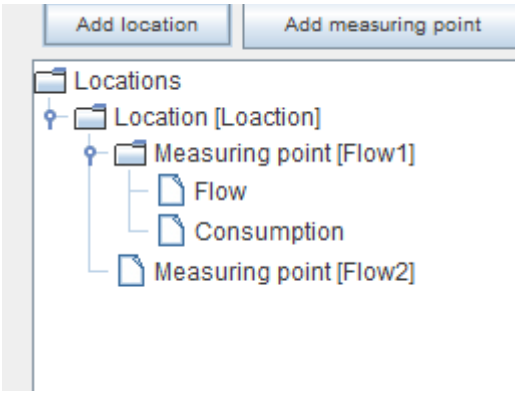

The selected channels are now added to the Measuring point.

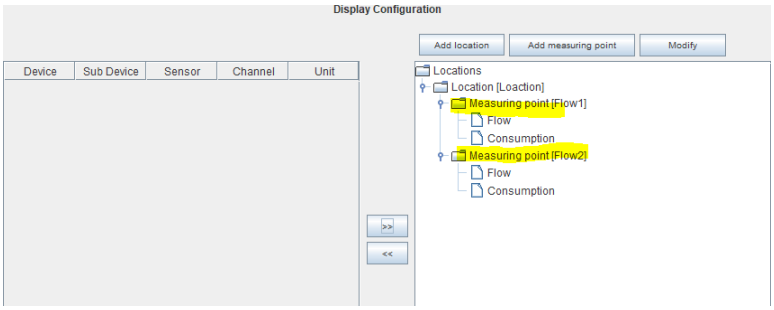

Repeat these steps for all channels which should be displayed.

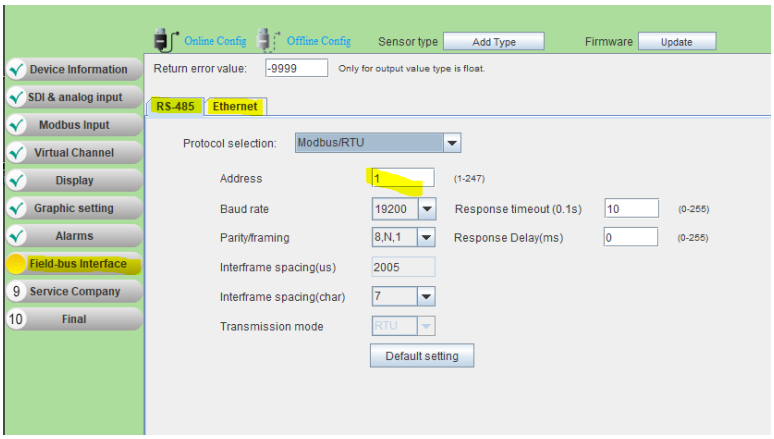

The option to configure the field bus is available in the **Field-bus interface** menu. Please do so if needed.

Note: this can also be configured at a later step via the touchscreen on the S330/S331 .

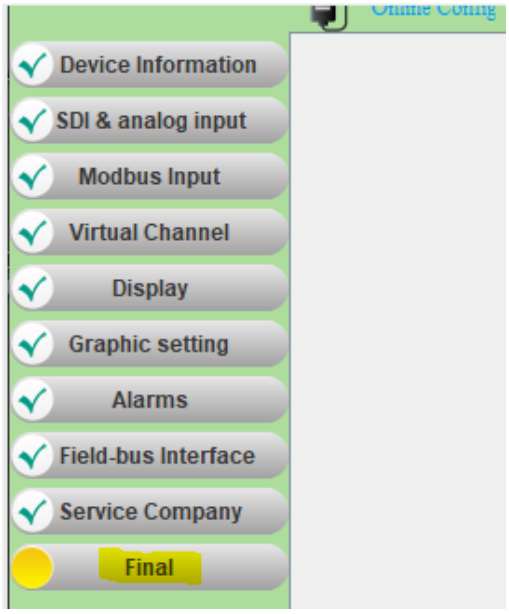

Finally, to download the configuration, select the **Final** menu from the left.

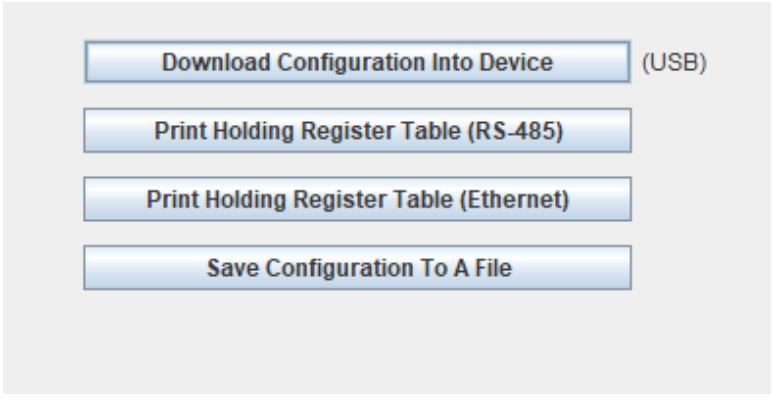

Here you can choose **Download Configuration into Device** this will download the configuration into the connected S330/S331.

9.2.3 Add a SUTO Analog/Pulse Device to S330/S331

Take the S401 as an example to add it to the S330/S331.

Prerequisite: Connect the S401 to the terminal E or F on the S330/S331 as described in section 8.2.7 Connect SUTO Devices to

Terminals E and F via Analog/Pulse (A1662 option).

On the S4C-Display interface, follow the steps below to add the S401 to the S330/S331 as a analog device.

1. On the left menu, click **SDI & analog input**. Then select the tab **Terminal E** or **Terminal F**.
2. Select the tab **Channel 1**. Select **4 ... 20 mA** from the drop-down box after **Measure Type**, and add texts in the **Description** field.

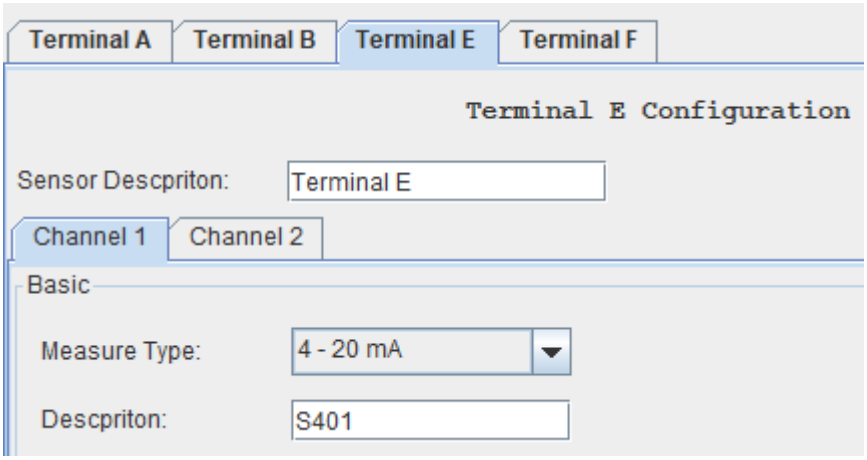

3. Click **Display** from the left side menu to add the S401 to be shown on the S330/S331 screen.

Device	Sub Device	Sensor	Channel	Unit
My Device(B)		S120	Temperature	°C
My Device(B)		S120	Oil vapor	mg/m³
My Device(B)		S120	Pressure	bar
My Device(E)		Terminal E	S401	°C
My Device(E)		Terminal E	Counter	°C
My Device(V)		Virtual ch1	Virtual ch1	°C
My Device(V)		Virtual ch2	Virtual ch2	°C

4. Add the channel to the location and measuring point:
   Select the channel on the left side by marking it.
   Then click the arrow **>>** in the middle to add the channels to the view.

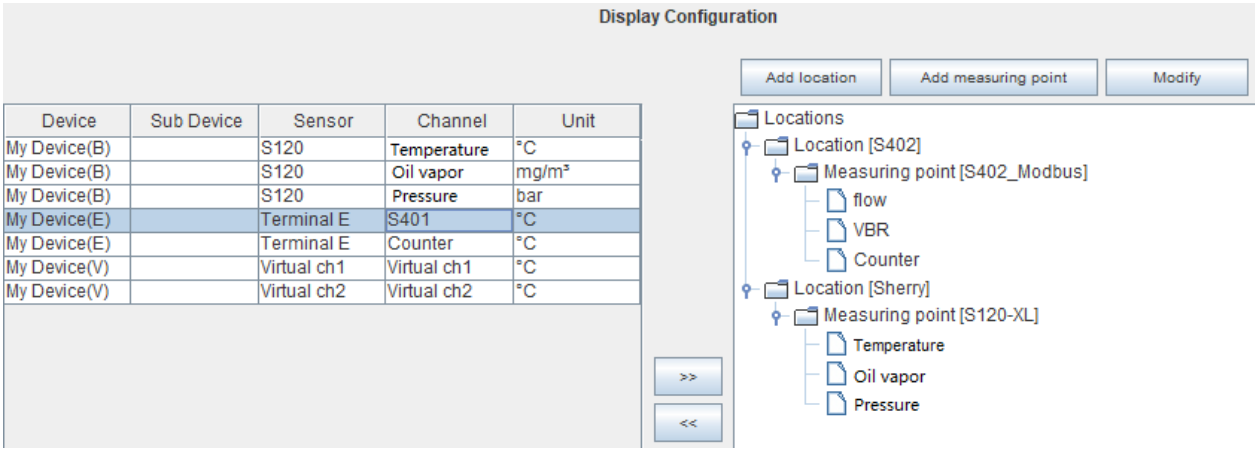

5. Click **Time & Logging** from the left side menu, and tick the items to be displayed.

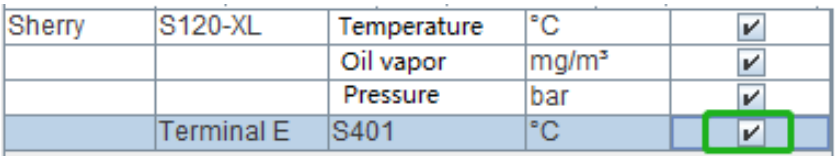

6. Select **Final** from the left, then click **Download Configuration into Device** to download the configuration into the S330/S331.

9.2.4 Add a 3rd Party Device to S330/S331

Prerequisite: Connect the 3rd device with the terminal A or B on the S330/S331 as described in section 8.2.6 Connect Devices to Terminal A and B via Modbus.

On the S4C-Display interface, follow the steps below to add a 3rd device the S330/S331 as a Modbus slave.

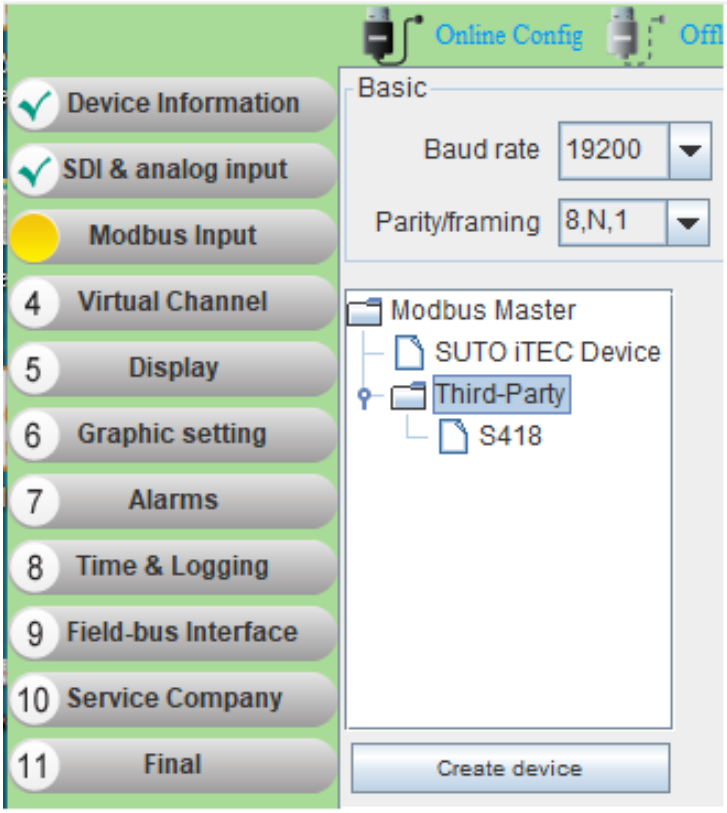

1. On S4C-Diaplsy main page, click **3 Modbus Input** > **Third-Party** > **Create device** to add a 3rd Modbus slave device.

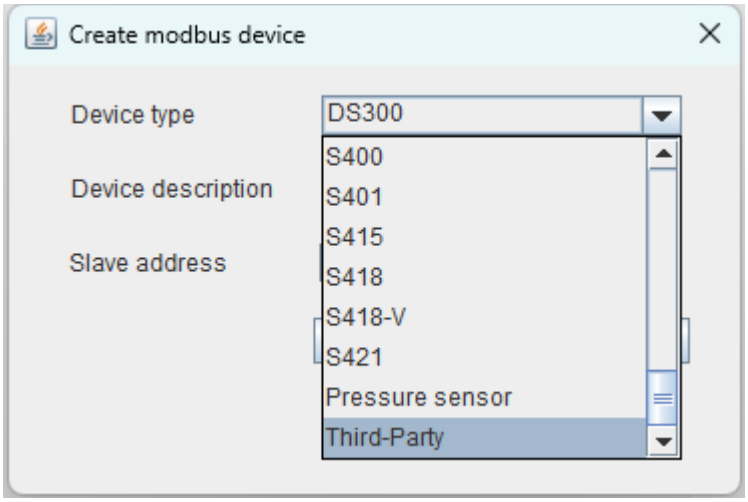

2. A new pop up is shown. From the **Device Type** drop-down menu, select **Third-Party**.

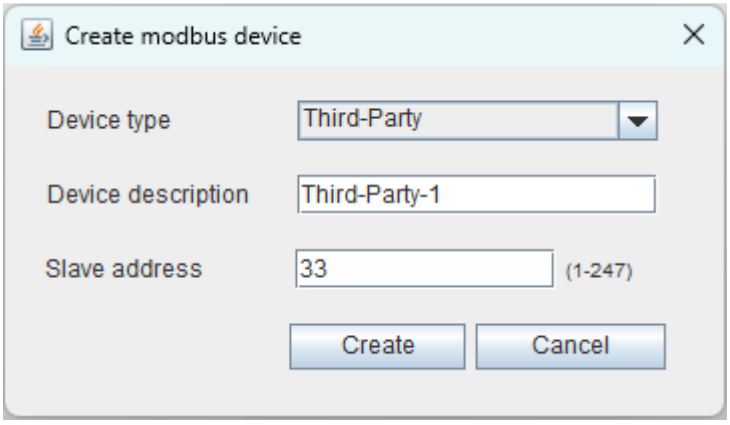

3. Enter the **Device Description** and the **Slave address** of the device. Typically the slave address is found on the device label or instruction manual.

After information is entered click **Create.**

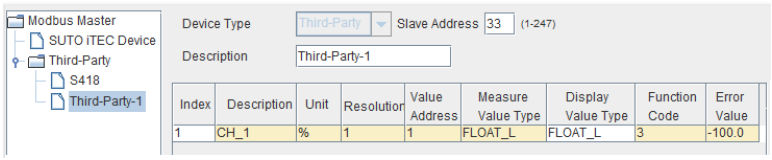

4. The new created device is now added to the list of connected slaves.

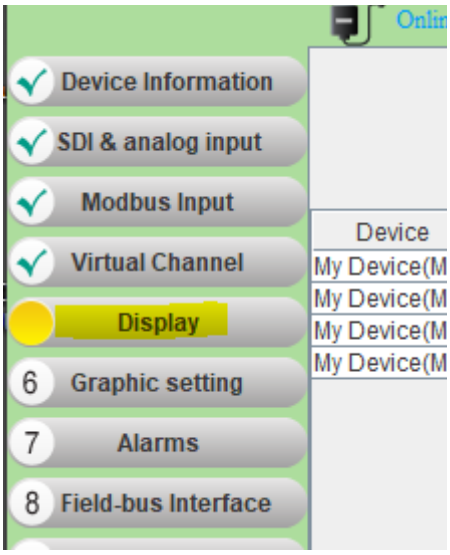

5. Select **Display** from the left side menu to add the configured device to be shown on the S330/S331 screen.

6. In order to display the devices on the S330/S331 screen, the device must be added to a location and measuring point.
If the location and measuring point has not existed, create new ones as indicated.

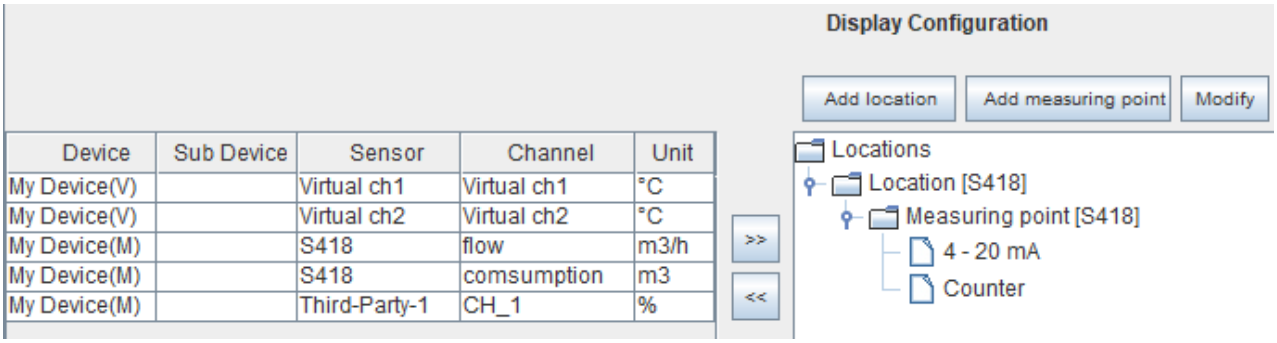

7. After Measuring points are created you can add the devices.
Therefore select the channel on the left side by marking it.
Then click the arrow **>>** in the middle to add the channels to the view.

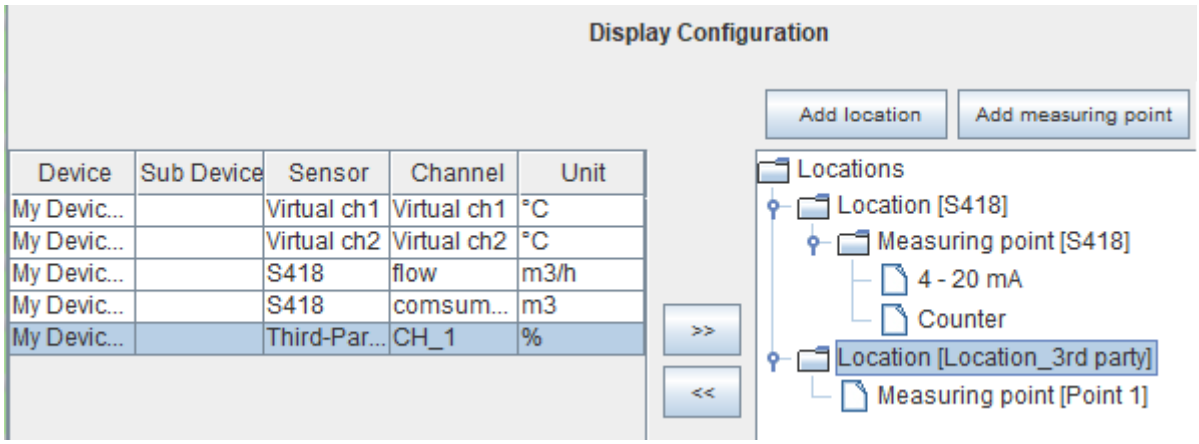

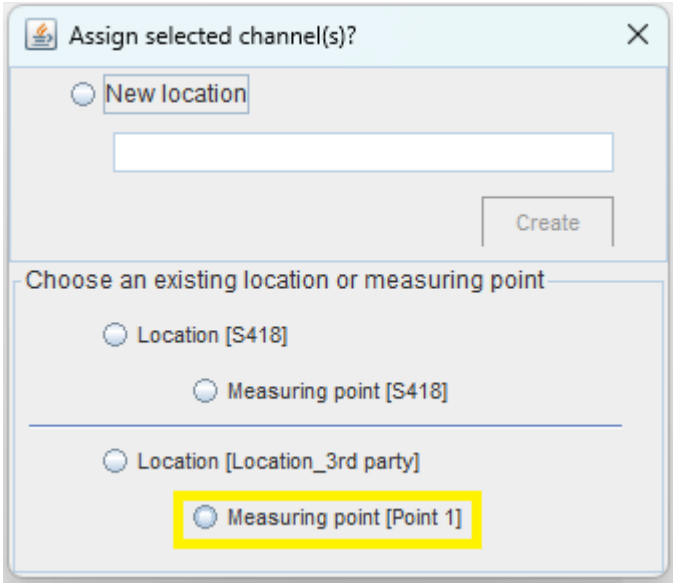

8. Select the Measuring point.

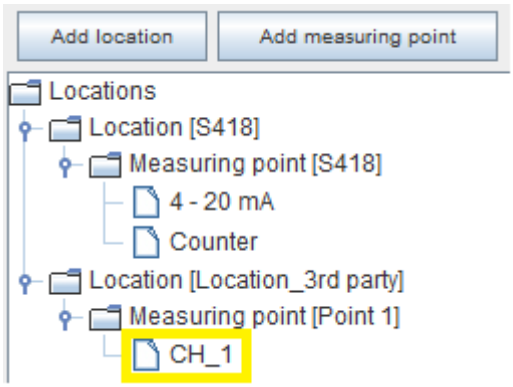

9. The selected channels are now added to the Measuring point.
Repeat these steps for all channels which should be displayed.

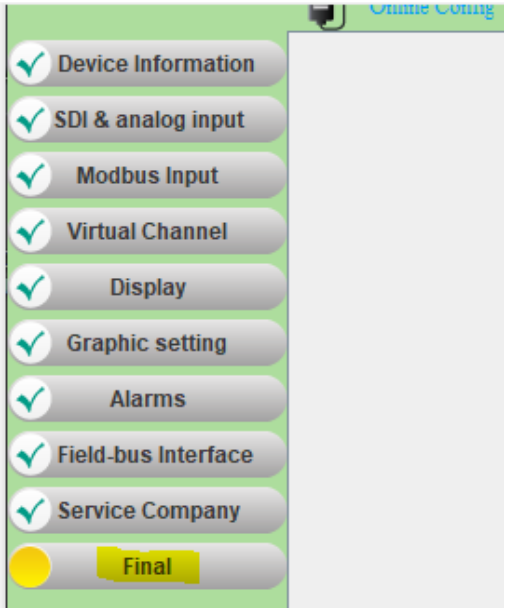

10. Finally, to download the configuration into the device, select the **Final** menu from the left.

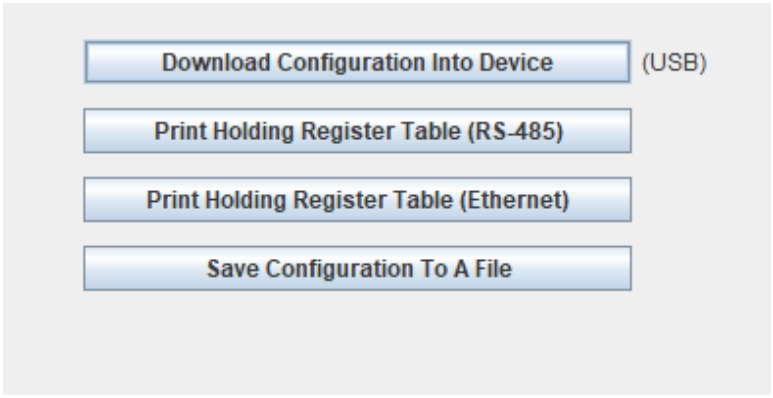

11. Select **Download Configuration into Device** this will download the configuration into the connected S330/S331.
Note: This setp can also be done after all devices are added.

9.3 Download Configurations to S330/S331

If you have not loaded the configuration of each configured device to the S330/S331, you can load all configurations together.

1. Click **Final** in the left menu.
2. Click **Download Configurations into Device** to download all configurations to the S330/S331.

9.4 Save/Load Configuration as Files

9.4.1 Save Configuration to a File

After all configurations are done, you can save setting to a file for later use. You can recover it if needed or share it with support / service.

On the S4C-Dispaly, click **Final** from the left. Then click **Save Configuration To A File** to save configurations to your PC as a file.

9.4.2 Load configuration from a file

1. On the S4C-Dispaly, click **Device Information** from the left.

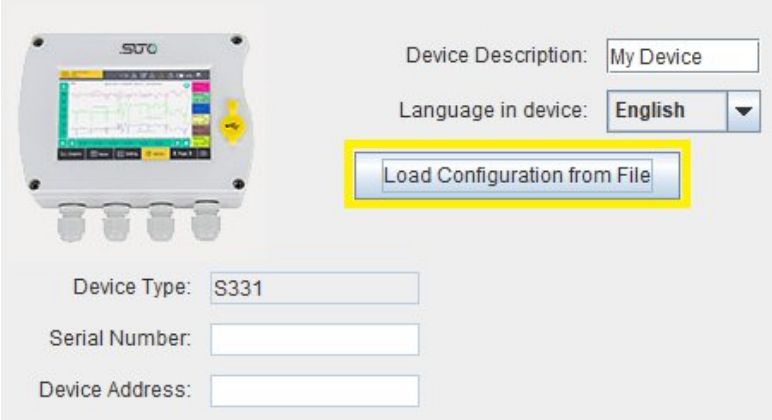

2. Click **Load Configuration from File**.

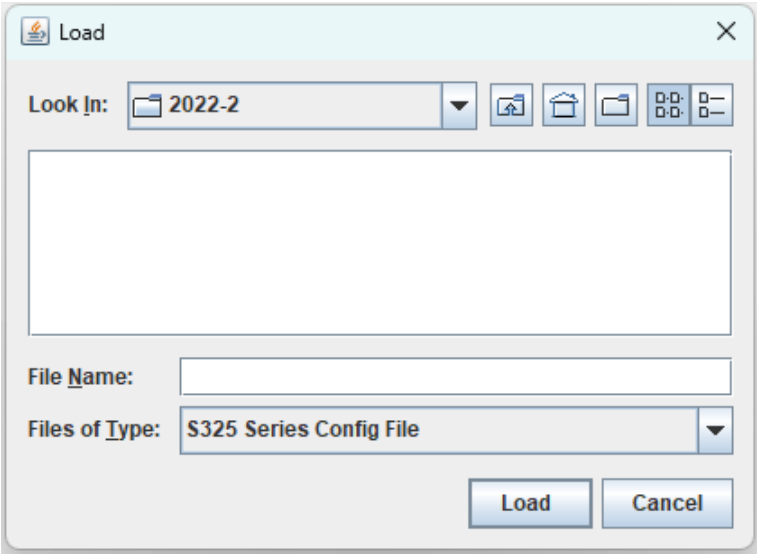

3. Select the configuration file from your PC, and click **Load**. The configurations in the file will overwrite the original settings in the S330/S331.

10 Settings using Touchscreen



When the S330/S331 starts up, the launch screen appears for a few seconds. During this period of time, the sensor connections are established and a few other initialization tasks are performed.

10.1 Value Screen

After startup, the S330/S331 displays measurement values of sensors. The display of measurement values may exceed one page. To view the data on the next page, touch the arrow button on the screen.

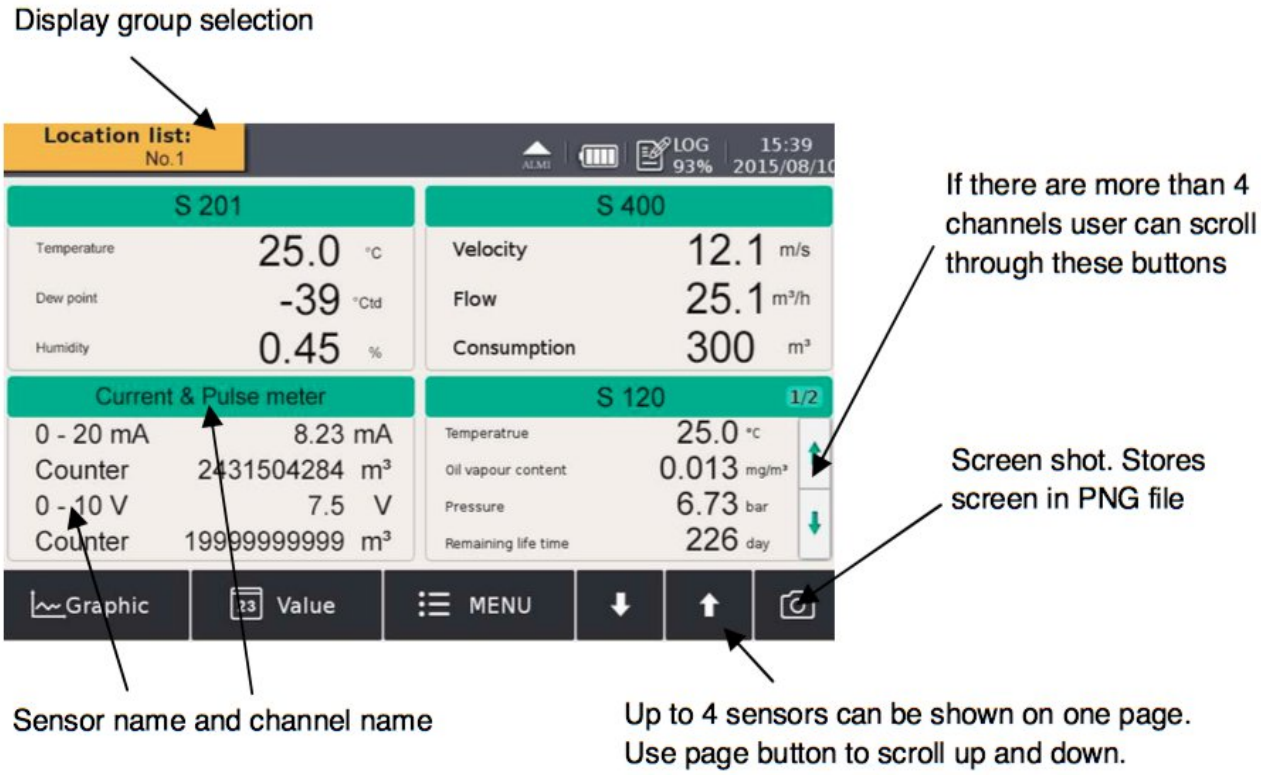

Remark:

S330 does not support the feature of **Screen shot**.

10.2 Main Menu

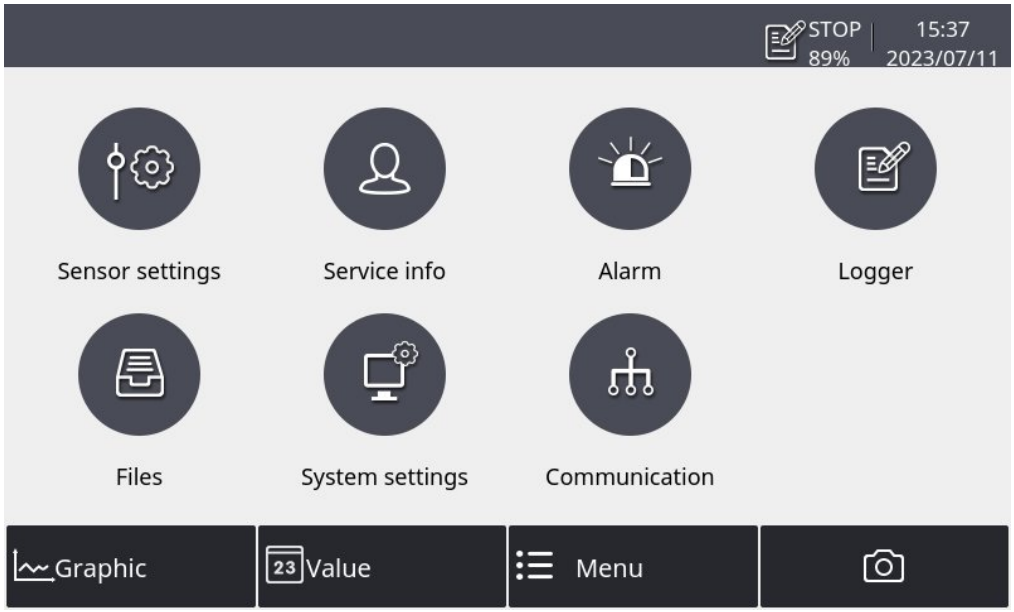

Status bar

Function buttons

Quick buttons

The main menu consists of the following sub-menus:

Sensor settings	Settings related to the connected sensors.
Alarm	Alarm settings and status.
Logger	S331 data logger settings.
Files	All recorded files and screenshots. The memory status can be checked here.
Service info	Contact information for service.
System setting	Other system-level settings.
Communication	Communication settings related to Modbus master, field bus RS-485 or Ethernet, and IIoT.

10.3 Icons in the Status Bar

	USB stick connected		System error
	Sensor connection has changed, not matching with configuration		Sensor unit is not matching with configuration
	Logger version S331		RTC backup battery status
	Sensor calibration is expired		Alarm triggered
	S4M SaaS connected		

10.4 Graphic Screen

10.4.1 Add a Data Curve

Follow the steps below to add a data curve:

1. Enter into the graphic view. Long press the N/A icon on the page.

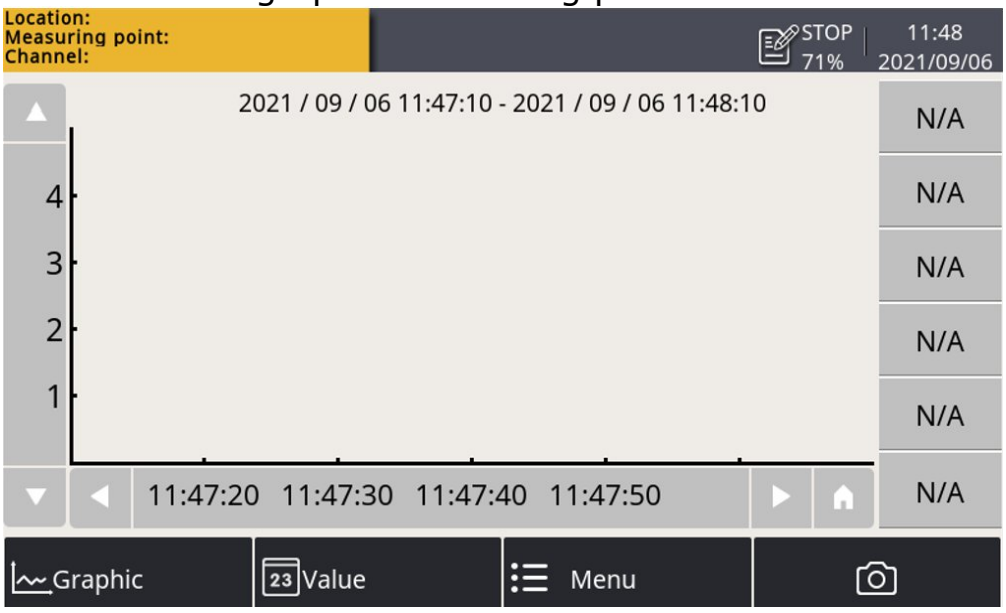

2. The channel setting window is present as below. On this page:

- Click the ••• icon to select the location, sensor and channel.

- Input a brief name in the **Abbr** item.
- Select the color for the curve.

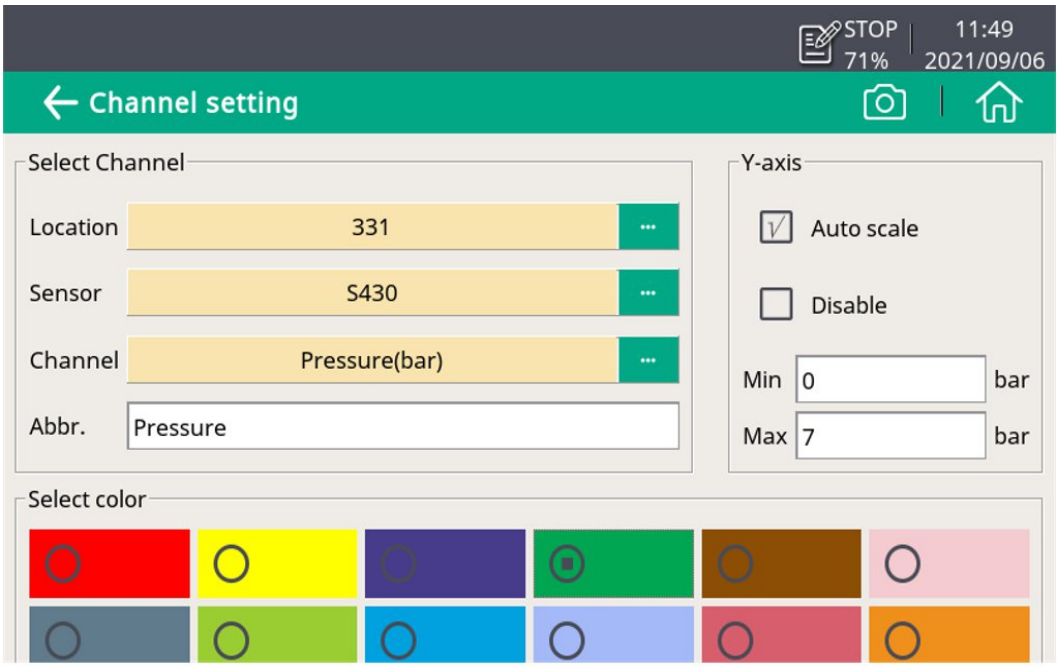

3. Click the icon, and the curve is created as below.

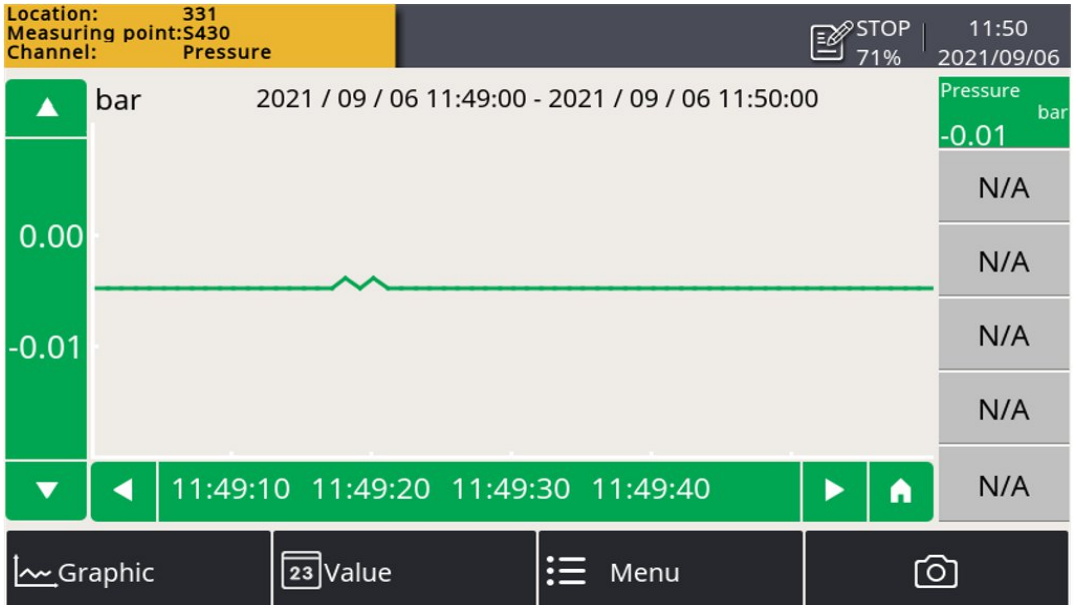

Notes:

- Only the data curve in the last 24 hours can be seen.
- By default, the data showing the curve are not saved when the S330/S331 is powered off. Thus the curve cannot be seen when the device is powered on again.
- To save the data, you must enable the logger.
  Use either of the following two ways to enable the logger:
  - Click **Menu** > **Logger** > **Key start**.
  - Click the 

icon in the status bar, then click **Key start**.

10.4.2 View Curves

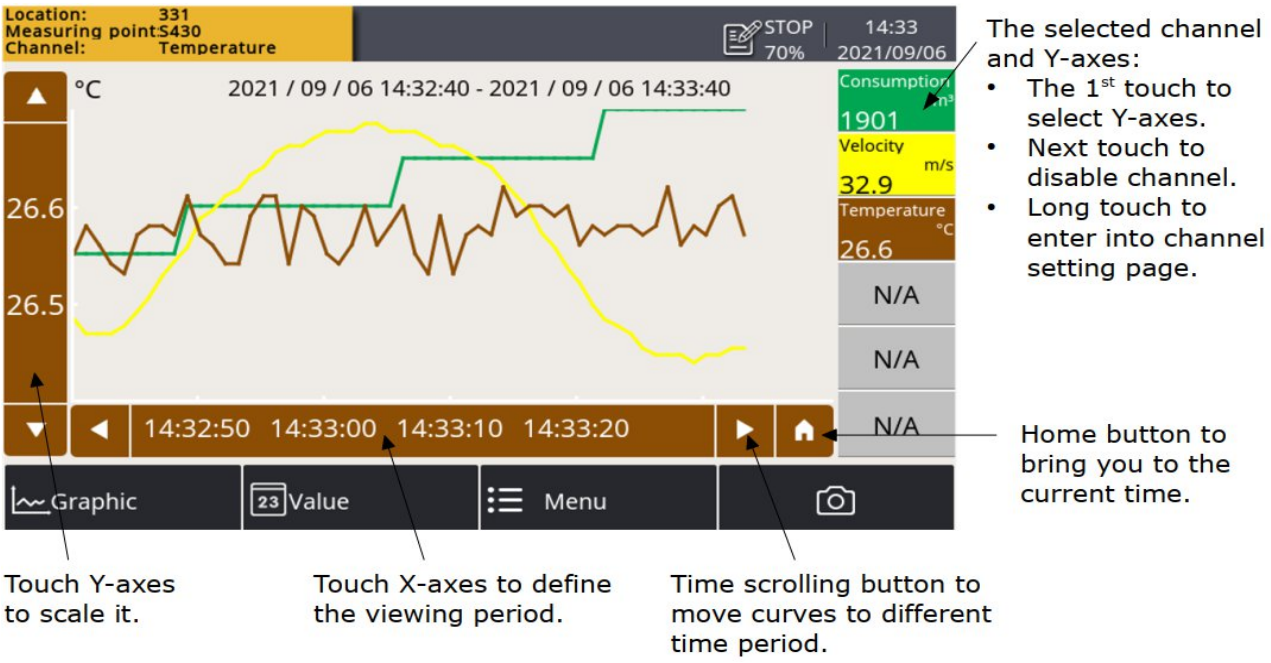

10.5 Sensor Setting

Enables you to configure physical sensors that are connected to the S330/S331 and virtual sensors, which are configured via S4C-Display. This section describes sensor settings by sensor types.

10.5.1 Change Sensor Settings

Detailed steps are as follows:

1. In the main screen, select **Sensor setting**.
   The screen shows a list of sensors.
2. Choose a sensor as needed.
3. View and configure the sensor settings through the left navigation menu.
4. Click **Save** to submit the changes to the sensor.

10.5.2 Dew Point Sensor

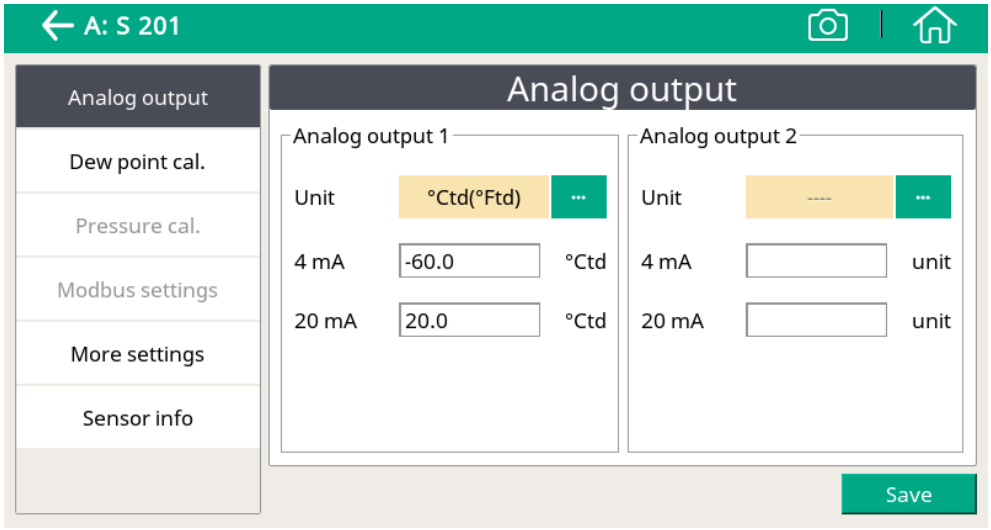

Analog output Select the physical moisture unit and set scaling for the analog output:
Whenever you change the moisture unit, it is recommended to adjust the scaling of the analog output. The S330/S331 will recommend a standard scaling.
The scaling is used to express the moisture through a 4 ... 20 mA signal, which then can be transferred to a PLC or SCADA system.
Set the moisture unit to ppm (V), g/m^3, mg/m^3.
Atmospheric dew point requires to enter a reference pressure.

Dew point cali.	Dew point sensor can be adjusted at one point wit a reference value. We recommend you perform calibration only below -40°C dew point by using a reliable reference.
Pressure calibration	Some dew point sensors have integrated pressure sensors which can be calibrated in this menu.
Modbus setting	Some sensors have Modbus interface. Communication parameters can be set here.
More settings	• Filters can be activated to dampen the output signal. • Auto calibration setting allows the activation of an auto calibration function. • Absolute pressure is required for g/m^3, mg/m^3, ppm[V] and atmospheric dew point calculation. The pressure must be entered as absolute pressure (not gauge pressure!). For the unit atmospheric dew point and ppm[V], the line pressure (absolute) must be entered. For the unit g/m^3, mg/m^3, if the calculation should be done under line pressure conditions, reference pressure of 1013 hPa must be entered.
Sensor info	Shows the sensor information for service inquiries.

10.5.3 Flow Sensor

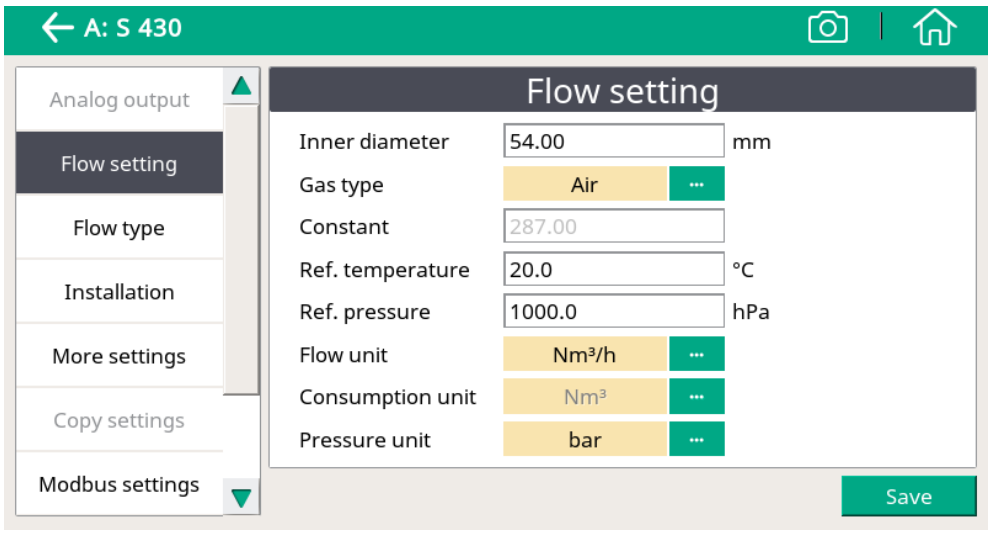

Analog output	Select the physical flow unit and set scaling of analog output: Whenever the flow unit is changed, it is recommended you adjust the scaling of the analog output. The S330/S331 will recommend a standard scaling. The scaling is used to express the flow through a 4 ... 20 mA signal, which then can be transferred to a PLC or SCADA system. Some sensors support active and passive analog outputs.
Flow setting	**Inner diameter:** To set for flow calculation **Gas type:** To select the gas type. (Some gases require the real gas calibration. Please contact the manufacturer.) **Ref. pressure:** To set for calculating the standard flow. **Ref. temperature:** To set for calculating **the standard flow.** **Constant:** Shows the gas constant of selected gas, or enter the gas constant for mixed gas or not-listed gas. **Flow unit:** To select a desired flow unit. **Consumption unit:** To select a desired consumption unit. **Pressure unit**: Only applicable to flow sensors that integrate the pressure sensor such as S430 and S418. To select a desired pressure unit.

Flow type	Only applicable to S430. To select the flow type from Flow, Dry air flow, FAD, and Actual flow.
Installation	Only applicable to an insertion type sensor. To select the installation method from center installation and 100 mm insertion installation.
More settings	**Std. consumption:** To set the internal consumption counter. **Rev. consumption:** Some sensors support bi-directional flow measurement. This is the counter for the reverse direction. **Altitude:** To set the altitude level. The default value is 0. **User slope:** To enable a correction of the flow by a factor. **Temperature coefficient:** by default temperature.
Copy settings	Enabled only for S551-P6.
Modbus settings	Enabled only for sensors with Modbus interface. Communication parameters can be set here.
Sensor info	Shows the sensor information for service inquiries.

Remark:

Reference pressure and reference temperature are used to calculate the standard flow at standard conditions, for example, 1000 hPa, 20°C. They are not related to the actual process pressure and temperature.

10.5.4 Vacuum Flow Sensor (Virtual Sensor)

If a virtual channel (for example, vacuum flow channel) is configured in the S330/S331, the corresponding virtual sensor is displayed in the sensor list. For configuration steps of a virtual channel, see section 14.1 Virtual Channels.

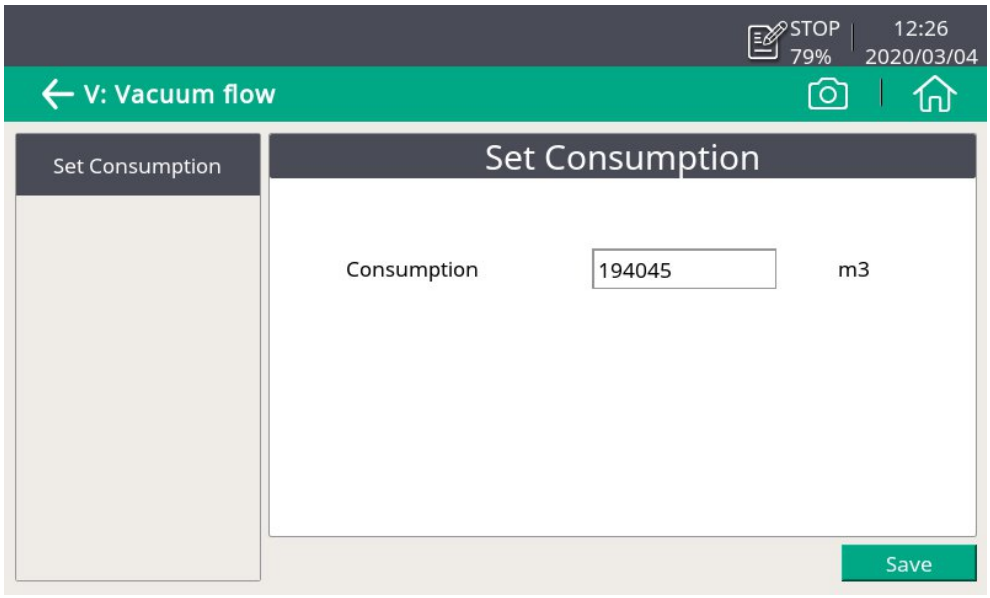

Consumption To configure the initial consumption value for the virtual flow.

10.5.5 Oil Vapor Sensor

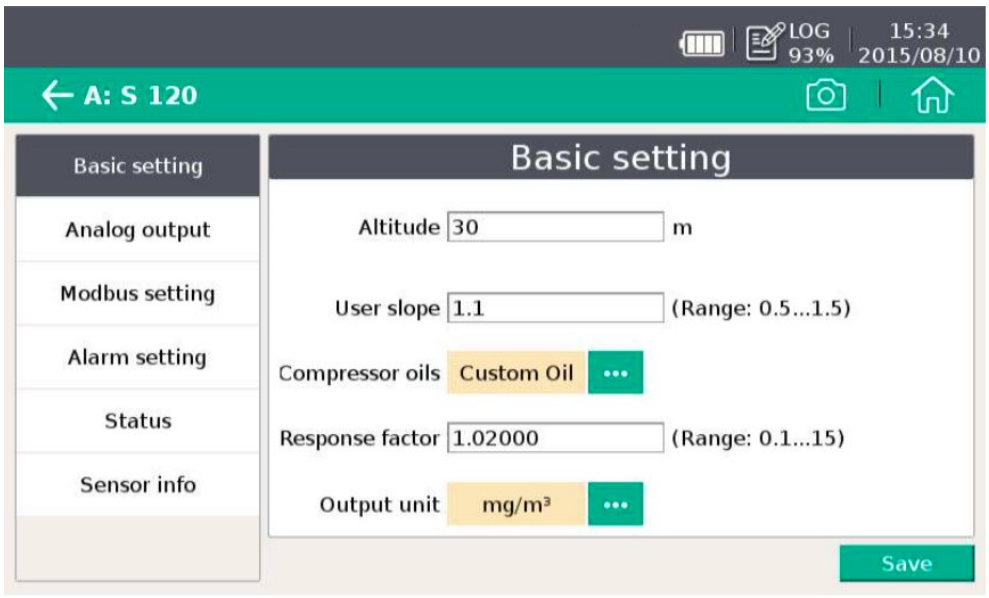

Basic setting	**Altitude:** To enter the altitude level, and the default value is 0. **User slope:** To enter a correction factor for the oil content. **Compressor oil:** To select an oil type. **Output unit:** Select the unit of the oil content.
Analog output	To set scaling of analog output (4 ... 20 mA).
Modbus setting	To set address, baud-rate and parity for Modbus communication.
Alarm setting	To enable or disable the alarm function and set the alarm threshold.
Status	Shows the PID sensor lifetime, valid calibration time, remaining filter capacity (the filter is consumable component used for the auto zero calibration), gas temperature, and pressure. There is an indication at each line whether the value is normal or not.

10.5.6 Analog Input Channel

The S330/S331 provides two optional analog input channels for various analog signals (4 ... 20 mA, 0 ... 10 V, etc.). Please note that these channels must be initialized using the S4C-Display software. Only after that, you can configure the channel details on the S330/S331.

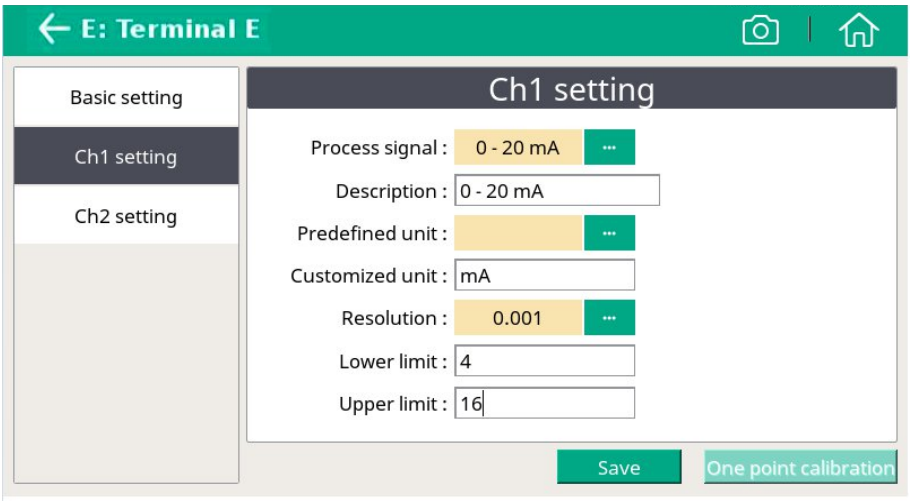

Basic setting	**Sensor description:** To enter a sensor name.
CH 1 setting	**Process signal:** To select 0 - 20mA or Pulse. **Description:** To enter a sensor name. **Predefined unit:** to select a physical unit. **Customized unit:** Enter a name for the measurement unit as you want. **Resolution:** To select a resolution (how many digits behind the decimal point). **Lower limit:** To enter the lower limit for the measurement range. **Upper limit:** To enter the upper limit for the sensor measurement range. **One point calibration:** The instrument provides a one-point system calibration, which can eliminate accuracy failures of instrument and sensor. If an accurate reference is available (e.g. calibration lab), the system can be calibrated at one point to this reference. The calibration is stored inside the S330/S331. This calibration offset is applied to every sensor connected to the terminal that is used for calibration.

Ch 2 setting (counter only)	**Measure type:** Only counter is selectable. **Description:** To enter a channel name. **Predefined unit:** To select a physical unit. **Customized unit:** To enter a name for the measurement unit as you want. **Count/pulse:** To specify how many consumption units one pulse is equal to.

10.6 Alarm Management

The S330/S331 comes with two alarm relay outputs and optical alarm indications (flashing value). The **Alarm settings** can be used to define alarms and thresholds.

10.6.1 Alarm Setting

The S330/S331 provides two internal relays H and I. In addition, an optional relay module (A1510) is available. When the relay module is installed, up to 8 relays can be configured.

Follow steps below to set parameters for an alarm:

1. On S330/S331 touchscreen, click **Menu** > **Alarm** > **Alarm settings** to enter the alarm setting page.

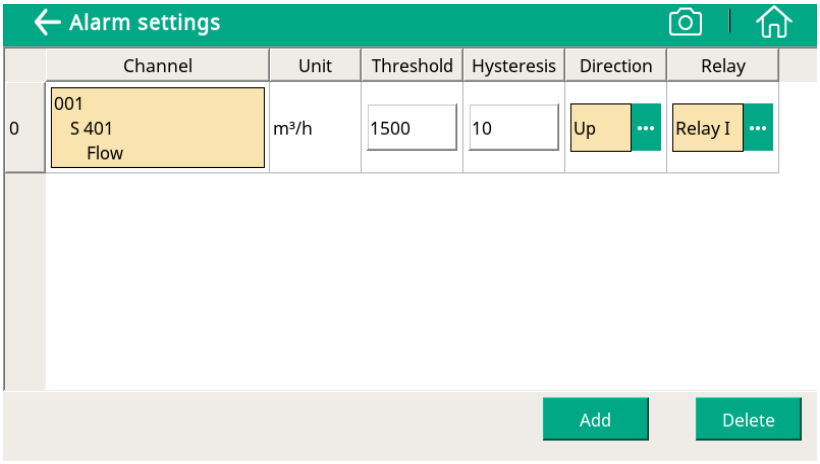

2. Click Add to add an alarm.
3. Set alarm parameters.

   Either on the S330/S331 screen or on the S4C-Display software, you can set alarm parameters.

The alarm parameters are explained as below.

Channel	Select the channel to be set.
Unit	Set the unit of the channel.

Direction	**Up**: indicates the alarm is triggered when upper limit is reached. **Down**: indicates the alarm is triggered when lower limit is reached.
Threshold **Hysteresis**	The threshold and hysteresis are used to activate or deactivate the alarm. • When the channel value is higher than the threshold, the **Up** alarm is activated. When the channel value is lower than the (Up threshold - hysteresis), the **Up** alarm is deactivated. • When the channel value is lower than the threshold, the **Down** alarm is activated. When the channel value is higher than the (Down threshold + hysteresis), the **Down** alarm is deactivated. 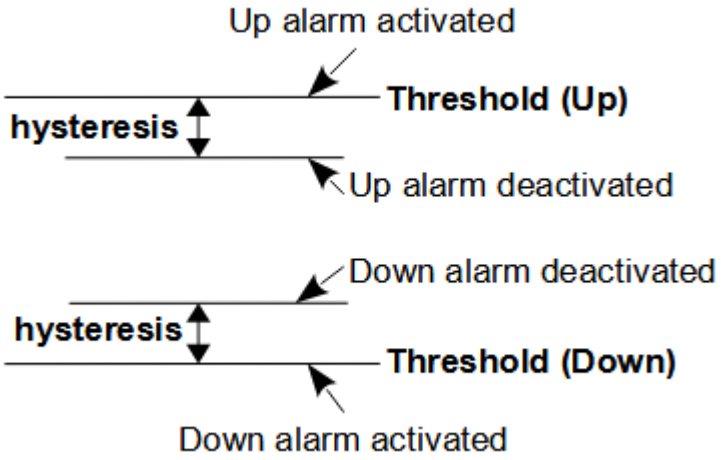
Relay	Select Relay I, Relay H, or relays provided by the optional relay module (A1510).

10.6.2 Monitor and Dismiss Alarms via S330/S331

The following ways are available to monitor alarms.

- The S330/S331 comes with optical alarm indication, that is, when an alarm is activated, the relevant value on the S330/S331 screen is flashing.
- The S330/S331 comes with two alarm relay outputs. Connect the external alarm unit with the S330/S331 alarm relay as described in section 8.2.4 Connect External Alarm Units. When an alarm is activated, the external alarm unit will emit sound or light, telling you there is an alarm.

- View activated alarms on S330/S331 screen.
  Click **Activated alarms** on the alarm page, the activated alarms will be listed.

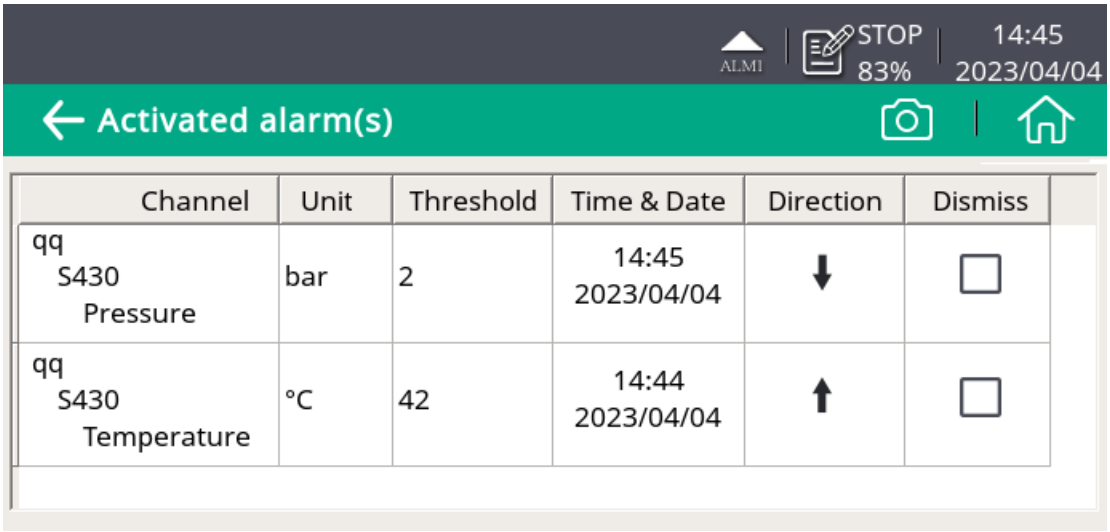

- When an alarm is deactivated, it is not shown in the activated alarms list.
- When selecting **Dismiss** an alarm (as below), this alarm will not trigger the alarm relay.



10.7 Logger

View the logger status and control the logger.

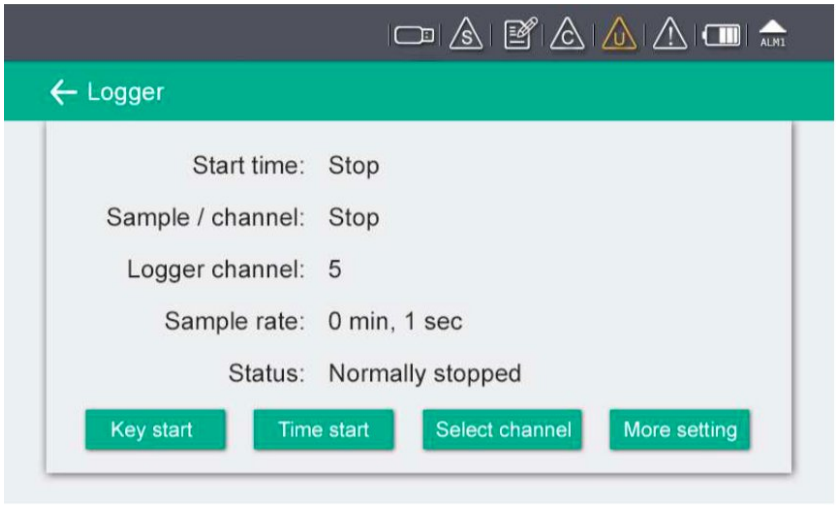

Start time	Logger start time.
Sample / Channel	Recorded sample number per logging channel.
Logger channel	Total recording channel number.
Sample rate	Shows the sampling rate. To change the sampling rate, click More settings.
Status	Logger status.
Key start button	To start logging immediately.
Time start button	To configure a scheduled start for logging.
Select channel button	To select the channel to log for.
More setting button	To configure the logging interval, logging mode, and memory mode. • Average: Turning Average on means to log the average value during an interval; turn the average off means the logged value is an instantaneous one. • Memory mode: Choose a mode as needed. ◦ Full stop: Logging stops if the memory is full. ◦ Wrap around: If the memory is full, new logging data overwrites the oldest data.

10.8 Files

View and process recorded files and screen-shots; view S330/S331 memory status.

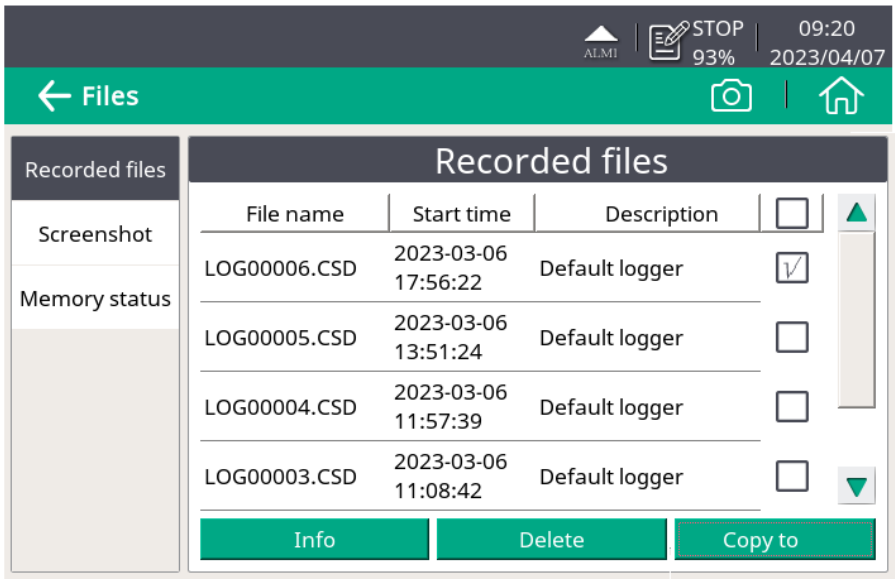

For how to export logger files or screen-shots, see chapter 11 Export Logger Files and Screen-shots.

10.9 Service Info

Contact information of service company can be set via S4C-Display software.

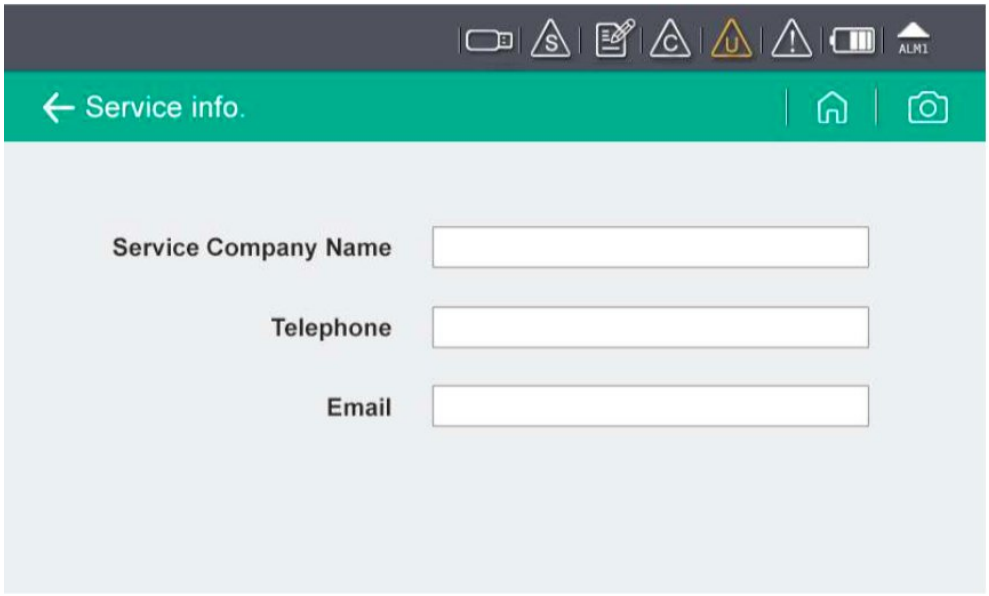

10.10 System Setting

This sub-menu enables you to change various system settings. Click an icon as needed and following the onscreen instructions to proceed.

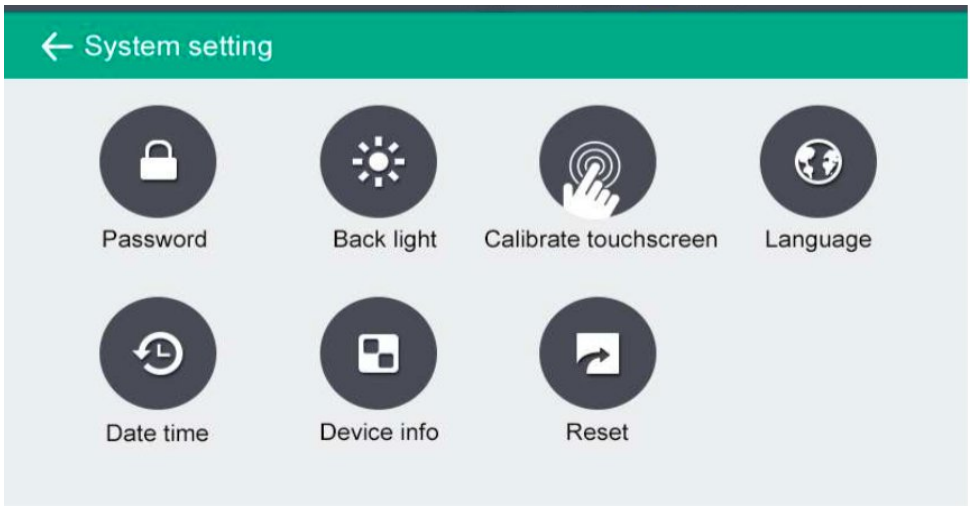

Password	To set password to protect critical operations.
Back light	To adjust brightness and timeout settings for power saving.
Calibrate touch screen	Calibrate touch accuracy.

Language	To select the user interface language.
Date time	To set date and time.
Device info	Shows information for service cases.
Reset	To reboot the display.

10.11 Communication

Configure how S330/S331 communicates with other devices and applications. Select a communication mode as needed and follow the onscreen instruction to proceed.

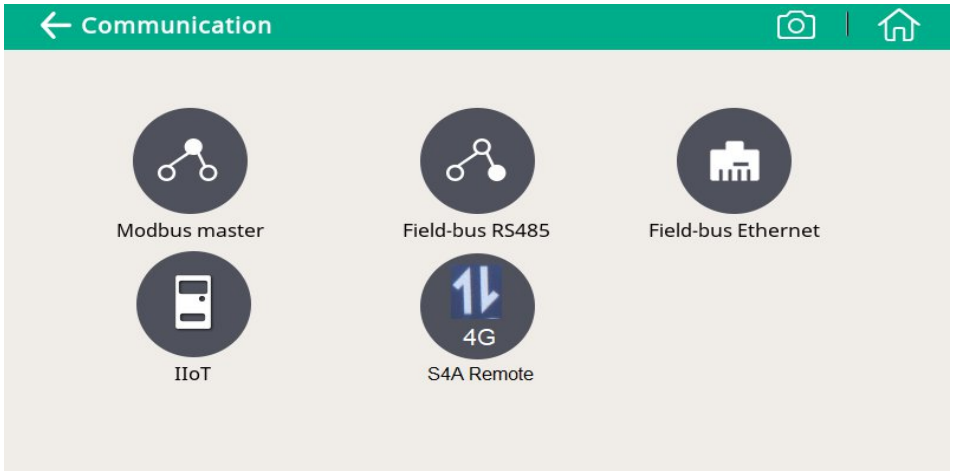

The following table lists the communication modes that S330/S331 supports.

Modbus master	To enter the Modbus communication parameters for S330/S331 (as the Modbus master) to communicate with Modbus slaves.
Field-bus RS485	S330/S331 works as the slave. Enter the port (1-247) that S330/S331 uses to communicate with the master.
Field-bus Ethernet	To enter an IP address for the S330/S331 or select DHCP for the S330/S331 to be assigned with a dynamic IP address.
IIoT	Only needed when the S4M is deployed. To enter the IP address or domain name of the S4M server.
S4A Remote	To configure S330/S331 to connect to S4A remote server, view measurement values, and read out logging files via the S4A software.

10.12 Establish S4A Remote Connection

If you buy the 4G/LTE function (A1670+A554 0131), you can view online measurement data on the S4A remotely after establishing the connection between the S330/S331 and the 4G modem.

Follow the steps below to establish the connection:

1. Install a SIM card into the provided 4G Modem and then insert the 4G modem to the M12 connector on the S330/S331.
2. Do following configurations on the S330/S331:
   a) Click **Menu** > **Communication** > **S4A remote** to enter the S4A configuration page.

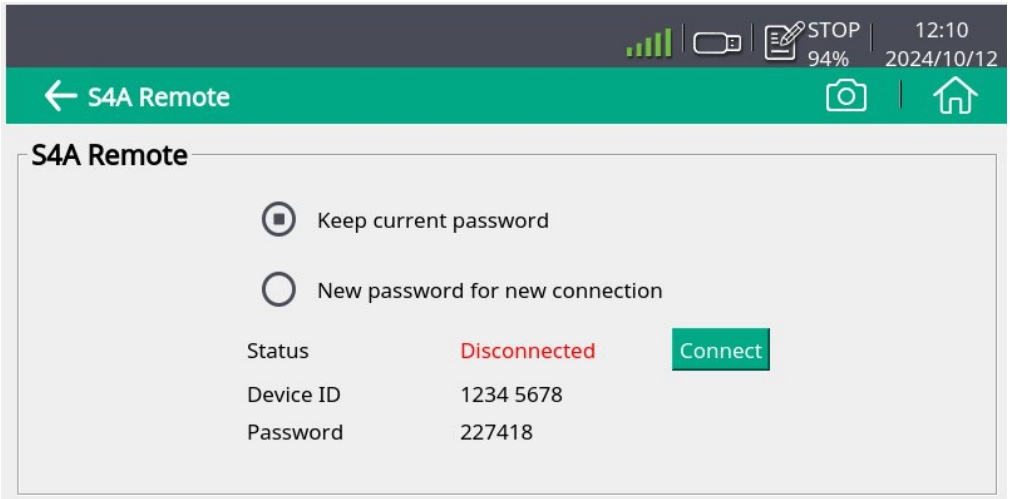

   - The device ID and password are used for you to establish remote connection by inputting them on the S4A software.
   - If selecting **Keep current password**, remember the password on the screen for later use.
     If selecting **New password for new connect**, a new password is generated showing on the screen. Remember it for later use.

   b) Click Connect to establish the remote connection of the S330/S331.
   After connected successfully, the S330/S331 indicates the information on its screen: the status changes to **Connected**, and the icon  in the status bar changes to .

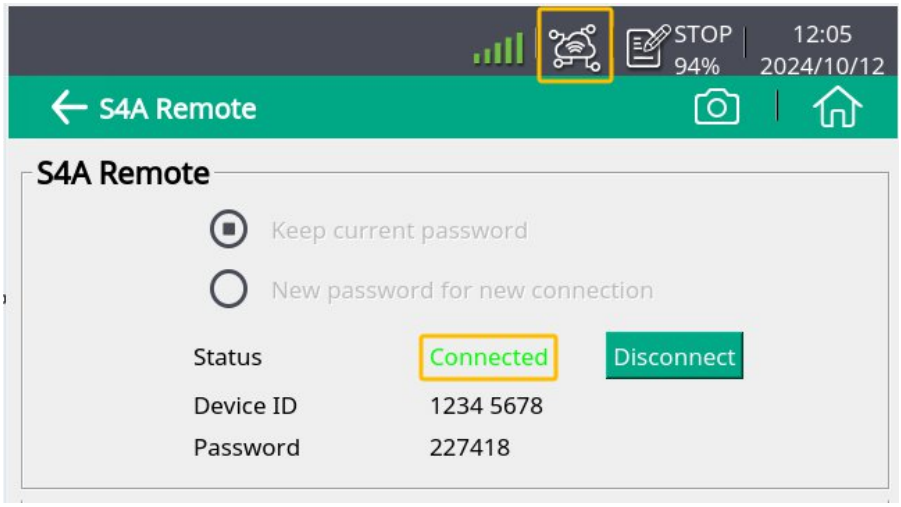

3. Do the following configurations on the S4A:

   a) Start the S4A software.

   b) On the S4A homepage, click **Detect**, and then click **Service Link**.



   c) Select the Device SN from the drop-down list, and enter the pass code, and click **Detect**.
   Note: the Device SN is the Device ID, and the pass code is the password on the S330/S331 S4A Remote page.



d) After connected successfully, the S330/S331 comes up on the S4A page. Click **OK** to enable the S4A to access the remote S330/S331.

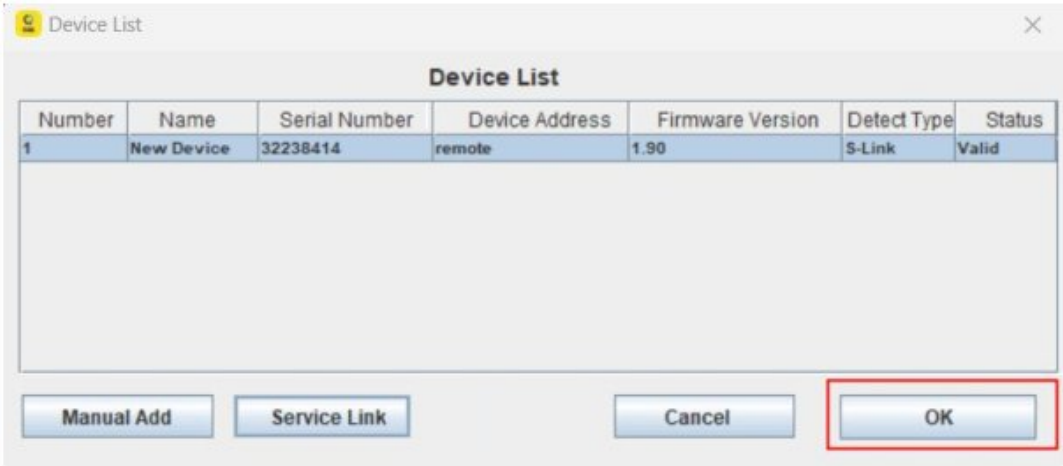

Now you can view the online measurement values, and read out the logging files on the S4A software.

10.13 SIM Card Requirement for 4G/LTE Option

To establish the 4G/LTE communication between the S331/S330 and S4A software with S4A remote function, customers need to buy a SIM card locally.

10.13.1 Data Traffic

The required data depends on the number of sensors connected and total operating time. Refer to the table below if the S330/S331 is running 7×24 hours.

Sensor connected	Data per Month (GB)
1 × S401 Thermal Mass Flow Meter	1
1 × S401 Thermal Mass Flow Meter 1 × Pressure Transmitter	2
1 × S430 Pitot Tube Flow Meter	3
1 × S110-P Power and Energy Meter 1 × S430 Pitot Tube Flow Meter 1 × S401 Thermal Mass Flow Meter 1 × Pressure Transmitter 1 × Temperature Transmitter	12
2 × S110-P Power and Energy Meter 2 × S430 Pitot Tube Flow Meter 1 × S401 Thermal Mass Flow Meter 1 × Pressure Transmitter 1 × Temperature Transmitter	21
4 × S110-P Power and Energy Meter 4 × S430 Power and Energy Meter 1 × S401 Thermal Mass Flow Meter 1 × Pressure Transmitter 1 × Temperature Transmitter	40

10.13.2 PIN Code Protection

The S330/S331 does not support modifying SIM PIN code on the screen. If your SIM card has PIN code protection, disable it by using other devices, for instance using your mobile phone.

11 Export Logger Files and Screen-shots

You can export logger files and screen-shots from the S331 to your local PC for further analysis. Two ways are available to export:

- Export using the S4A Software
- Export using a USB disk

Note: Requirements to the USB disk are as follows:

- With the OTG function
- In the FAT 32 format
- The capacity ≤ 256 GB

11.1 Export Logger Files and Screen-shots using S4A

Preparation:

1. Download the S4A Software from www.suto-itec.com and install it to your PC.
2. Connect the S331 with your PC using the supplied USB cable.

Start the S4A Software and follow the instructions below:

1. In the top bar, click **Ethernet** to switch it to **USB**.
2. Click **Detect**, and the Online view appears on the screen.

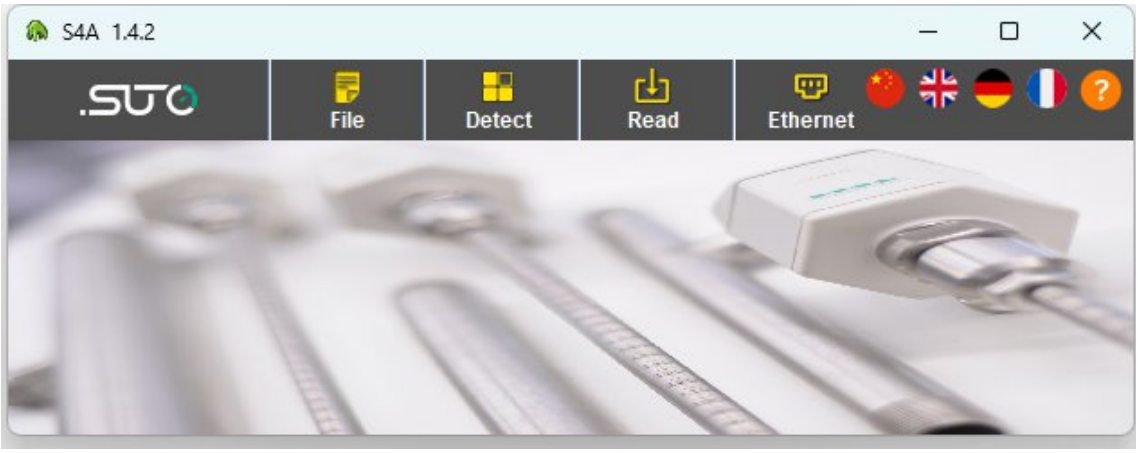

3. Click **Read** in the top bar. The Selection window appears. Select the logger files or the screenshots that you want to download, then click **OK**.

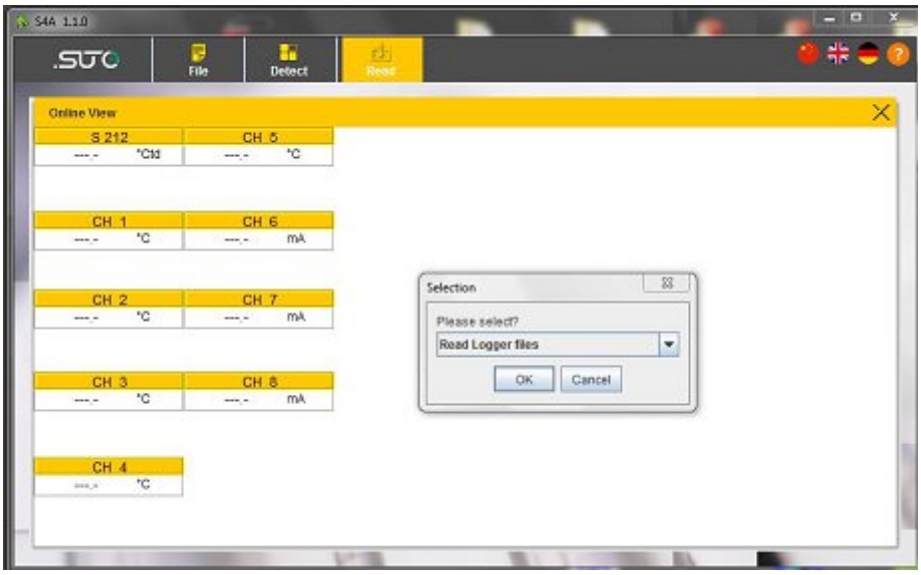

4. The following window appears showing the log files that are saved on the S331 data logger.
   Select a single or multiple files and click **Read Selected File(s)**.

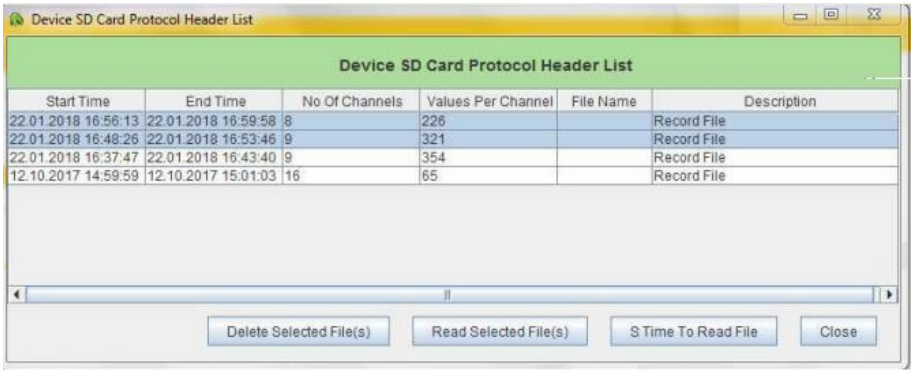

5. A pop up will ask where to save the data. Remember the path. Then click **Save**.

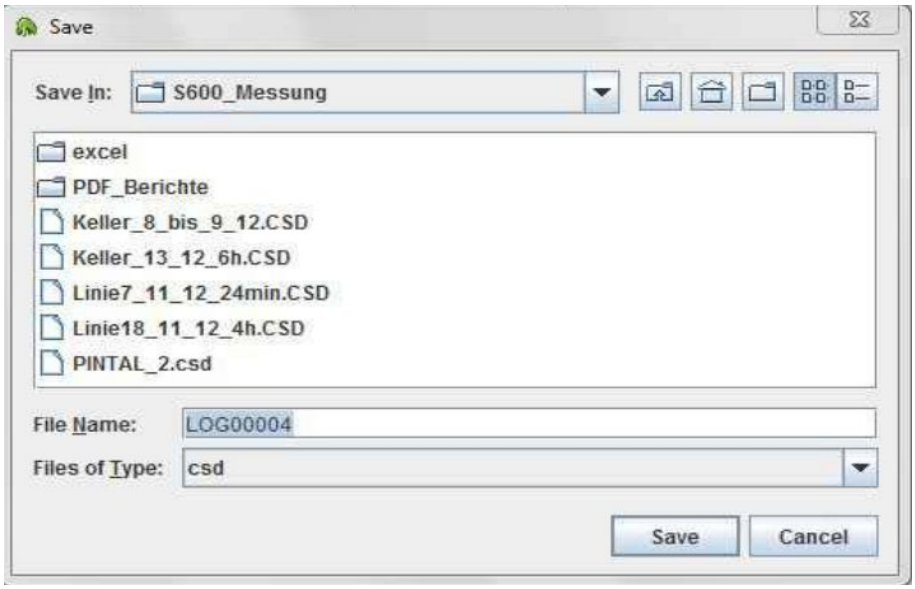

6. After saving, a new window appears showing the downloaded data in a graphic view. Views can be zoomed, modified, and exported.

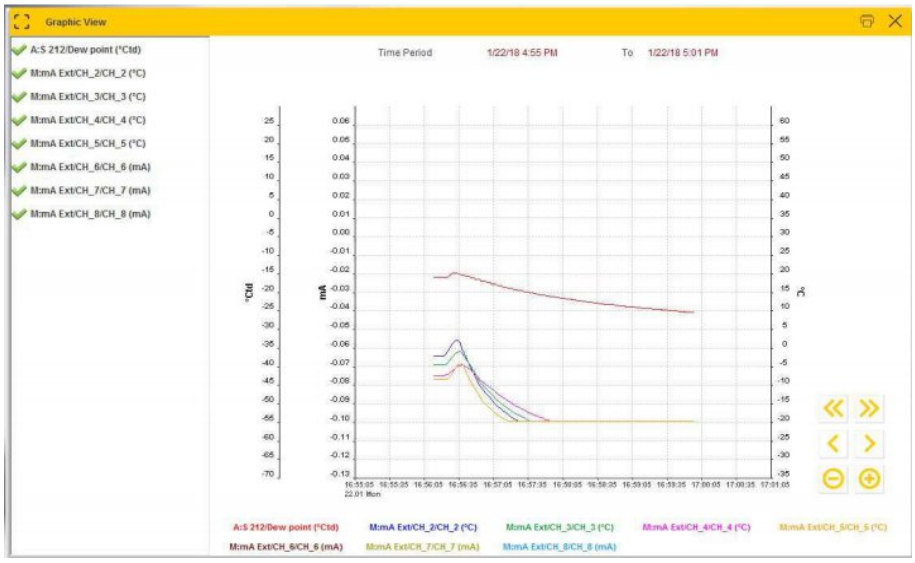

7. To view graphics of a different file or to export a file into the Excel or CSV format, click **File** in the top bar. The following window appears.

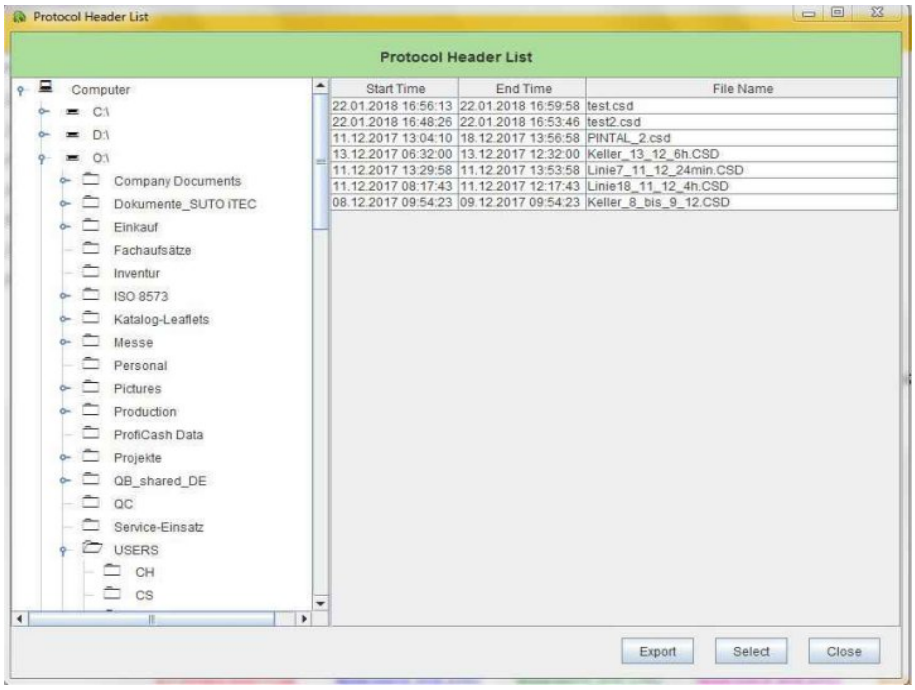

a. To view the graphics of a file, select the file and click **Select**. The graphic view of the file appears.

b. To export a file into the Excel or CSV format, select the file, and click **Export**.

Remark:

The measurement value of -9999 in a logger file denotes an invalid measurement value or a measurement failure (e.g. if the sensor was not connected or the connection was interrupted). The measurement value of -8888 denotes an out-of-range measurement value.

11.2 Export Logger Files and Screenshots using USB Disk

1. Insert the USB stick to the connector on the front panel of the S331.
2. On the S331 touchscreen, click **Menu** > **Files**. All recorded files are listed.

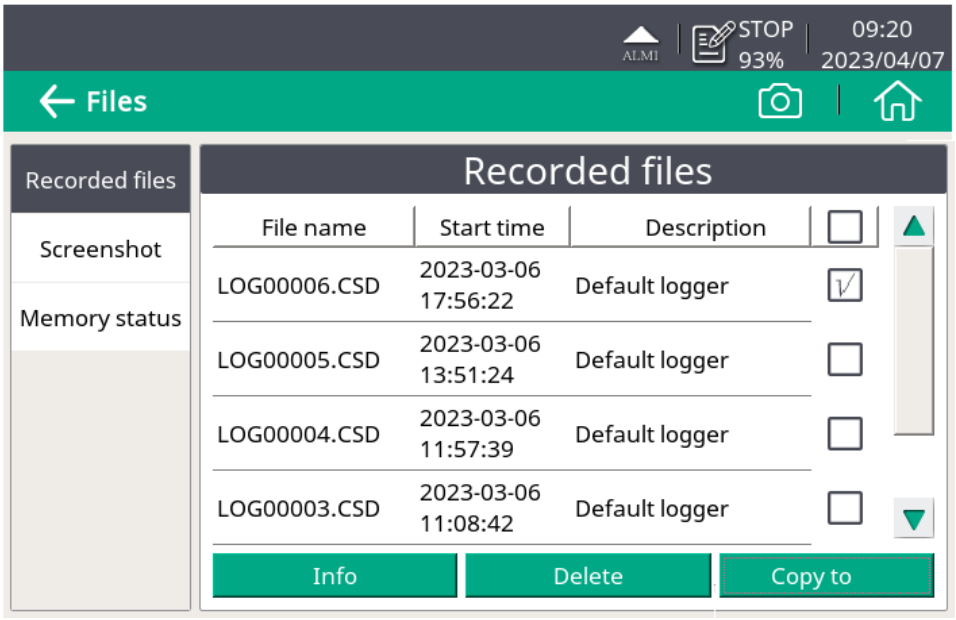

3. Select files to be downloaded, and click **Copy to**. The selected files are exported to the USB disk.
4. On the **Files** page, click **Screenshot** on the left to export screenshots to the USB disk.

12 Build Network using Modbus Interface

Using the Modbus output terminals (C and D) on the S331/S330, you can connect all the measuring instruments in your system into a communication network, thus you can use S331/S330 to monitor the measurements of all the measuring instruments.

12.1 Integration with a Factory Automation System

You can use the communication solutions to connect S330/S331 to a factory automation system. In these solutions, S330/S331 enables the factory automation system to retrieve measurement data from sensors, which is sufficient for most of the field applications.

12.1.1 RS-485 through the Modbus-to-RTU gateway

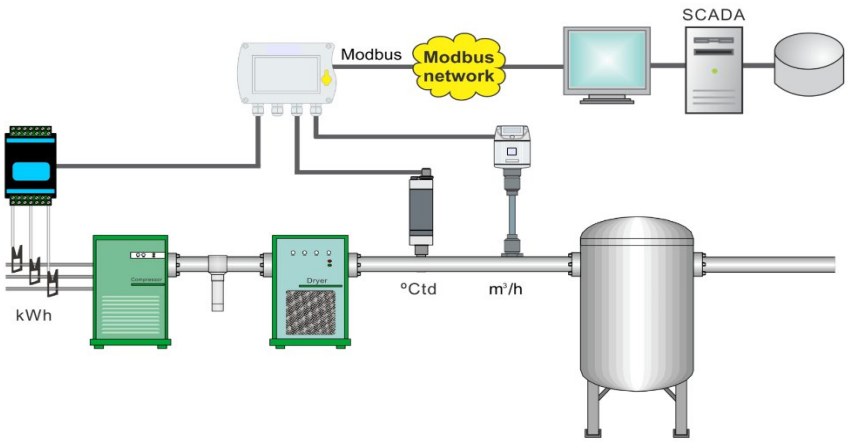

Modbus is a popular industry bus that can be used to connect several S330/S331 to a Modbus master. A PLC, a SCADA system, or a S330/S331 Master can work as the Modbus master.

12.1.2 Field-bus Ethernet through the Modbus/TCP

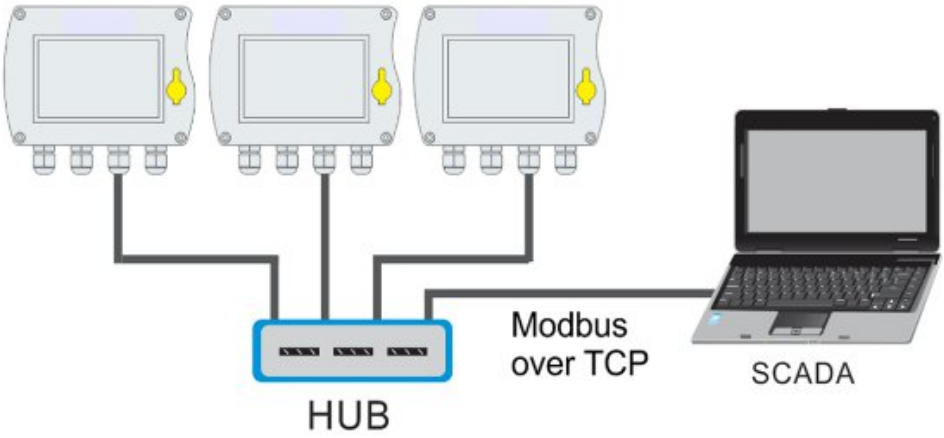

S330/S331 comes with an Ethernet interface. By selecting the Field-bus Ethernet protocol from the S330/S331 menu, the communication with a Modbus master can be established. This is a popular way to connect to a Modbus Master through Ethernet. Process visualization systems are using so-called OPC servers to establish the link to Modbus.

12.2 Standalone Solution

SUTO provides a standalone total solution for industrial communication, which includes data recording and analysis. If measurement values still need to be fed into a SCADA system or a Factory Automation System, you also have the option to use the analogue signals (4...20 mA or pulse).

12.2.1 Monitoring and Analysis Software

S4M and S4A are designed for this solution.

S4M can communicate with almost unlimited devices in a network (Ethernet or RS-485). The key features include:

- Online measure values of all instruments and all channels in parallel.
- Change the background picture of the screen as needed, such as using the plant schematics.
- Online records the selected channels over all instruments.
- Backs up data for online recording and recovery after power failure.

- Monitors alarms and records alarm history.
- Starts / stops logger inside S331.
- Reads recorded data from S331 data logger.
- Reports generation and graphical analysis.

12.2.2 Physical Networking Modes

This standalone solution supports multiple networking modes.

12.2.2.1 RS-485

RS-485 is commonly used in industrial applications. It can reach up to 1000 m distance with a shielded 2-wire cable. If further distance is required, a repeater can be installed to reach another 1000 m. Up to 30 S330/S331 instruments can be connected to the RS-485 network. Please ensure that SUTO protocol is selected on S330/S331 menu and every S330/S331 has a unique device address (1 – 247).

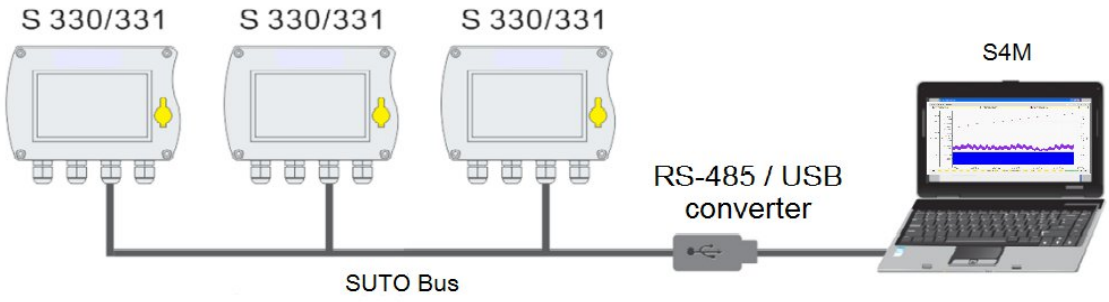

12.2.2.2 Ethernet

S330/S331 can be connected to an Ethernet switch or router or sometimes called a hub. Please consider following hardware and software requirements.

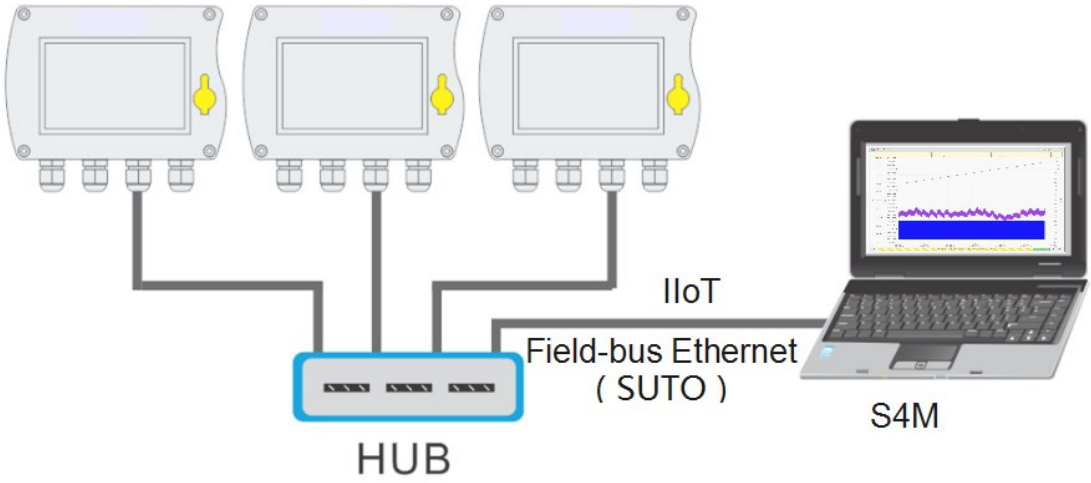

12.2.2.3 re Complex Networking Solutions

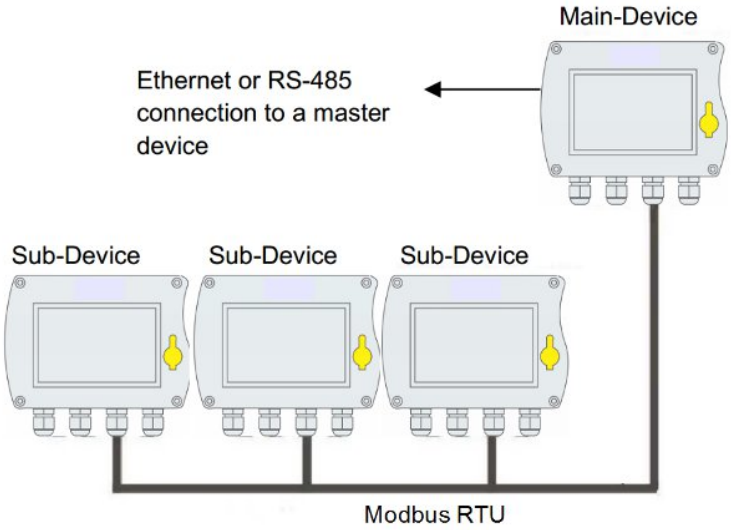

The above picture shows that S330/S331 (Sub-Device) - or any other device that has a Modbus/RTU interface can be connected to a Modbus-Master (Main-Device) through Modbus/RTU.

The Main-Device itself then can be connected to a higher level Master Device either through RS-485 or Ethernet.

The Master-Device on top monitors only the main device, which provides all measurement channels from the sub-devices.

12.2.3 Hardware Connection

This section introduces the hardware connections for S330/S331.

12.2.3.1 Ethernet Hardware



Internal RJ45 connector



External RJ45 connector (IP65)



Connect Ethernet cable and mount bend protection sleeve

Ethernet cable

An Ethernet cable with category 5 or better is applicable and the maximum cable length is 100 meter between S330/S331 and the connected HUB or computer.

12.2.3.2 RS-485 Hardware

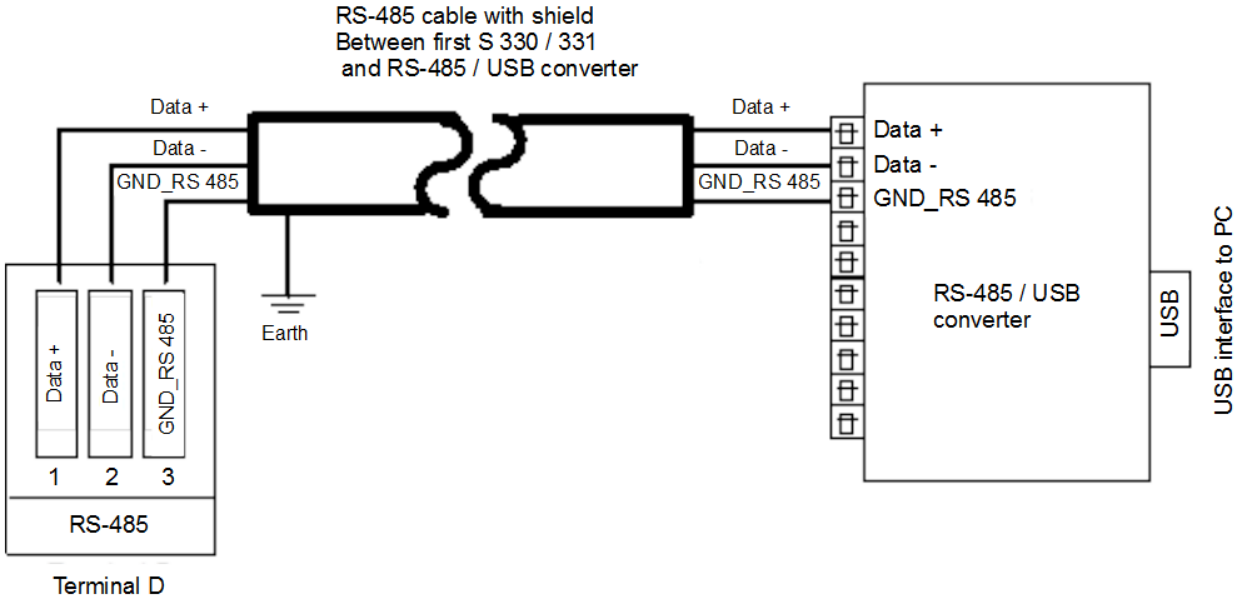

Through a RS-485 / USB converter the system is connected to a USB port of the office PC. RS485 network requires a termination resistor network. At both far ends of the devices, termination resistor must be turned on communication menu, all others S330/S331 remain off, Terminal resistor is software control in S330/S331. Please set it up correctly.
There are totally 3 poles on the terminal D for RS-485 network wiring. The pin function description is shown below.

Pin No.	Pin name	Function
1	Data +	Data + signal
2	Data -	Data - signal
3	GND RS-485	Ground of RS-485

RS-485 cable

According to the recommendations of EIA 485 standard, only cables should be used. A maximum of 30 devices may be connected to one segment. The bus cable must be laid at a distance of at least 20 cm from other cables. It should be laid in a separate, conductive, and earthed cable trunk. It must be ensured that no potential differences occur between the individual devices on the bus.

RS-485 cable specifications

- Impedance: 135 – 165 Ohm @ 3 to 20 MHz
- Cable capacity: < 30 pF/m
- Cable diameter: > 0.64 mm
- Cross section: > 0.34 mm², conforms to AWG 22
- Loop resistance: < 110 Ohm per km
- Screening: Cu shielding braid or shielding braid and shielding foil
- Outer diameter for power and sensor cable: 4.5 ... 8 mm

12.2.4 Fieldbus Interface Configuration

This section introduces how to configure the Fieldbus RS-485 and Ethernet interfaces using the S4C-Display software.

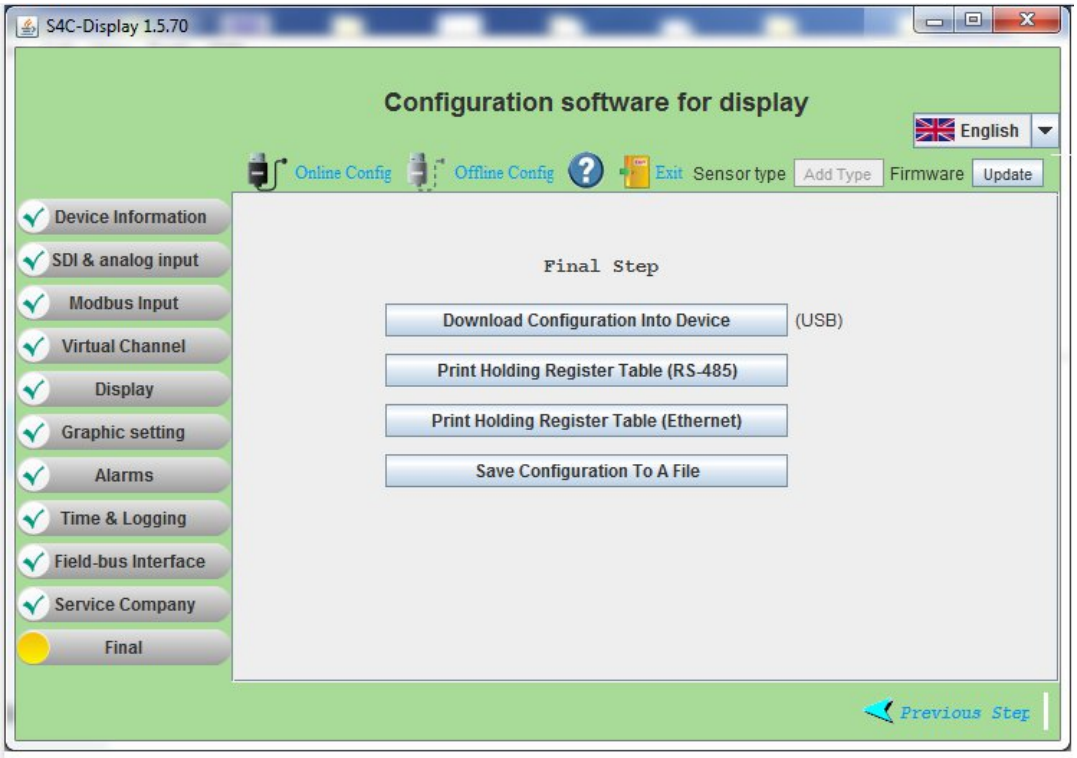

12.2.4.1 Field bus RS-485 settings

Setting	Description
Return error value	Enter the value that S330/S331 will return to the master as a measurement value in case of any error condition.
Protocol selection	Select SUTO Protocol if using the SUTO software, and select Modbus if the device is connected to a Modbus network.
Address	Each device on the RS-485 network must have a unique device address. Enter a number that is not assigned to any device in the RS-485 network as the device address of the S330/S331.

12.2.4.2 Field Bus Ethernet Settings

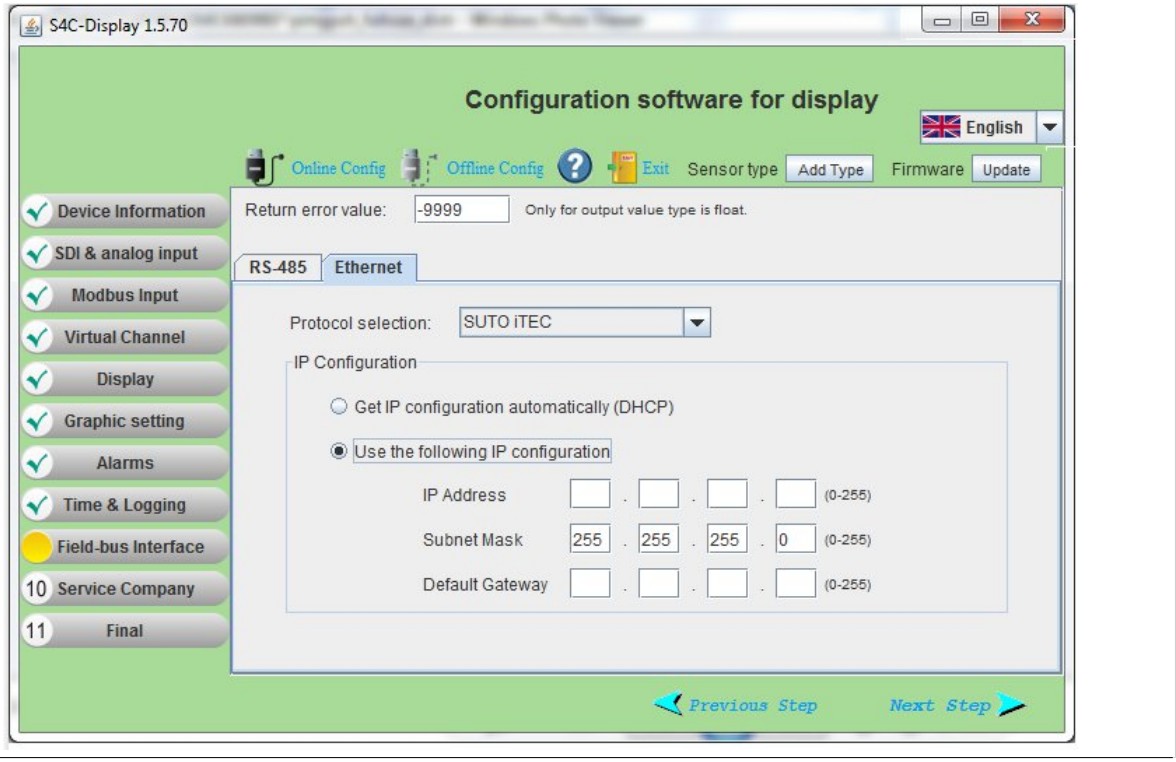

Setting	Description
Return error value	Enter the value that the salve device will return as a measurement value in case of any error condition.
Protocol selection	Select SUTO Protocol if using the SUTO software, and select Modbus if the device is connected to a Modbus network.

Get IP config automatically	Select this option to assign the S330/S331 an IP address through the network router. This is convenient but not a recommended choice in industrial networks. We recommend to choose a static IP address.
Use the following IP….	Enter the static IP address.

12.3 Print Modbus Slave Register Table

The Modbus Register Tabel can be different depdening on the configuration of the S331/S330, therefore there is no static Modbus Holding Register Table. When the S330/S331 is connected to a Modbus master or BMS, the Modbus master needs to be programmed based on this table.

The S4C-Display software can download the holding register table of the actual configuration with a few clicks.

What you need:

1. Download the S4C-Display software from www.suto-itec.com and install it to your PC.
2. Connect the S330/S331 with your PC using the supplied USB cable.

Start the S4C-Display and follow the instructions below:

Click **Online Config** > **Auto Detect** > **Select Display** > **Start Config** > **Final**.

Here you can find the buttons to print the Modbus Holding Register Table for RS485 (Modbus/RTU) and for Ethernet (Modbus/TCP).

Click **Print Holding Register Table**. This will create the PDF to access the Modbus register from external Modbus software.

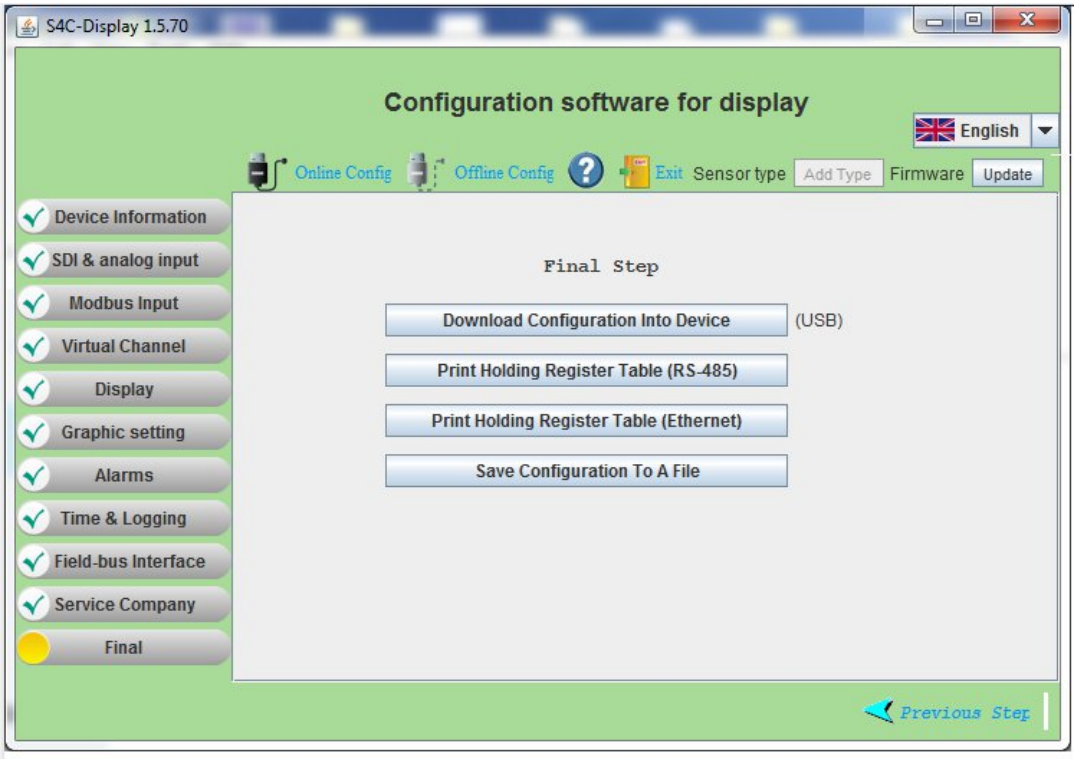

This is the example Modbus Holding Register to read from S330.

Flow = Register 4

Consumption = Register 6

Temperature = Register 10

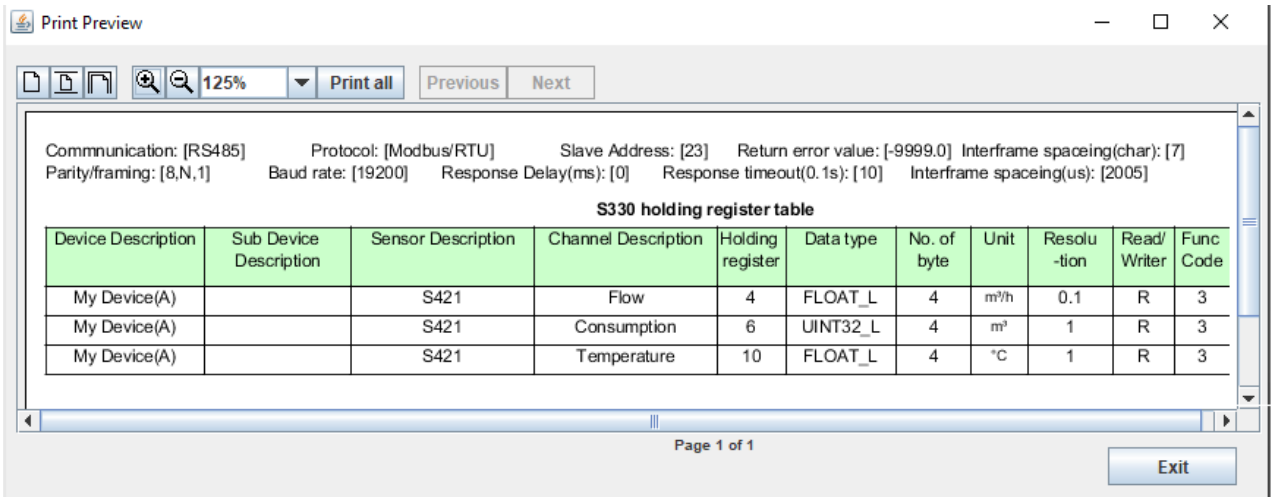

Device Description	Sub Device Description	Sensor Description	Channel Description	Holding register	Data type	No. of byte	Unit	Resolu -tion	Read/ Writer	Func Code
My Device(A)		S421	Flow	4	FLOAT_L	4	m³/h	0.1	R	3
My Device(A)		S421	Consumption	6	UINT32_L	4	m³	1	R	3
My Device(A)		S421	Temperature	10	FLOAT_L	4	°C	1	R	3

12.4 Troubleshooting

Ethernet

Problem: Cannot find any device or cannot establish communication.

Action:

- Check the device connection. There are two lights at S330/S331 Ethernet connector. When S330/S331 is properly connected, the yellow light is on indicating the power supply works normally, while the green light blinks indicating connectivity is present.
- Check the network cable. Make sure it's a workable RJ-45 Ethernet cable and connected properly.

  Note that the 'Link' light on the switching hub should be on.
- Make sure PC and S330/S331 are on the same subnet.
- Make sure there is a device or PC that has same IP address as the S330/S331.
- Make sure firewall settings on PC do not block the S330/S331 communication which uses port 502.
- Make sure the firewall is closed on the PC.
- Make sure that the PC has installed only one Ethernet card.

Problem: Communication is not stable.

Action:

1. Make sure the speed of switching hub that S330/S331 connects to is 100Mbps.
2. Make sure physical connection (network cable) is well connected.
3. Check and configure the communication option again in the **Configuration** > **Communication** menu.
4. Try to communicate again.
5. If it still does not work, try to reset S330/S331 by powering it off and on again. Restart the software. Then retry the communication.

RS-485
Problem: Cannot find any device or cannot establish communication **Actions**: • Make sure the RS485-USB converter is correctly cabled to the network. • Make sure each S330/S331 is set with a unique address.
Problem: Communication is not stable or lost during online reading. **Actions**: • Ensure that only the last device on the RS 485 network has the termination resistor switched on. • Ensure the bus cable must be laid at a distance of at least 20 cm from other cables. • Ensure the bus cable is no longer than 1000 m; otherwise consider to install a repeater. • Ensure the length of each T (stub) connection is no more than 1 m.

13 Monitor Data Remotely

You can remotely monitor measurement data from the S330/S331 using an Internet browser or the S4A software on the same network.

13.1 Enable remote Access

1. Connect the S330/S331 to your network.
2. Assign the S330/S331 with an IP address by using the **Communicate** > **Field-bus Ethernet** menu on the S330/S331 screen or **Field-bus Interface** > **Ethernet** on the S4C-Display software.

Remarks:

- You can assign a static IP address to S330/S331 or delegate the DHCP server to assign an IP address to S330/S331 dynamically. If the long term access is needed, we recommend you assign S330/S331 a static IP address.
- To enable access from Internet, please ask your IT administrator for help on router configuration.

13.2 Monitor Data through an Internet Browser

1. On a networked device (*for example*, smart phone, PC, and so on), start a Web browser.
2. View the S330/S331 IP address by accessing the **Communicate** > **Field-bus Ethernet > Status** menu on the S330/S331.
3. Launch an Internet browser, and enter the IP address of the S330/S331 in the address bar.

In the monitoring window that appears as shown below, you can view the information of the S330/S331 and measurement data. The measurement data in alarm is displayed in red.

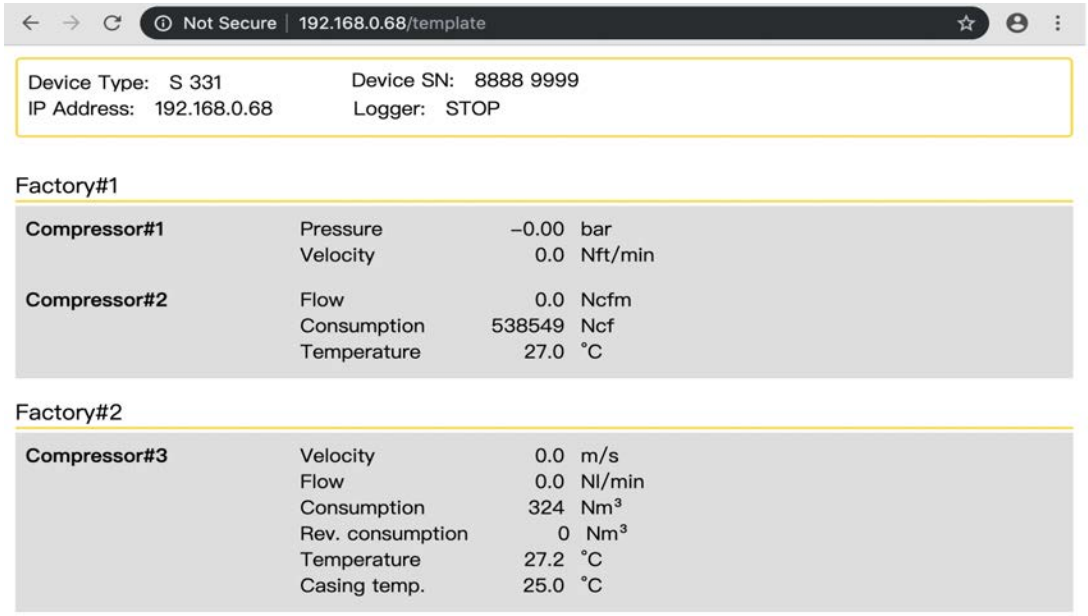

Remark:

- Because S330 does not include the data logger, its logger status always shows N/A.
- The web server only works if all devices are on the same network.

13.3 Monitor Data through S4A Software

1. Launch the S4A and open its online help.
2. Detect the S330/S331 on the S4A, as described in the "Detect the Connected Device" topic.

The online view of the detected S330/S331 appears. In this example, the S331 is configured with an S430 and an S421 sensors, but only the S430 is connected to the S331.

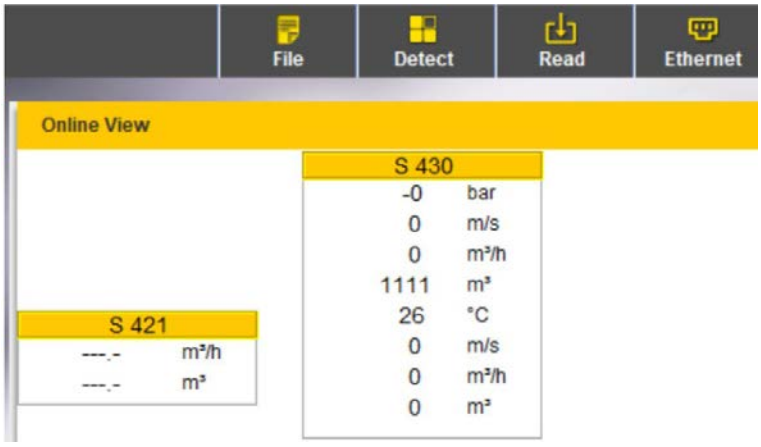

14 Extended Use of Virtual Channels

14.1 Virtual Channels

A virtual channel is a channel that is created by adding, subtracting, multiplying, or dividing two or more physical channels. By using the virtual channel, you can:

- Monitor the vacuum flow and consumption when a flow meter does not contain a pressure sensor.
- Monitor total flow or consumption for several branch lines.
- Perform any calculation on a physical channel, for example unit conversion calculations.

The virtual channels must be configured via the S4C-Display, and values of a virtual channel can be viewed on the screen of the S330/S331.

14.1.1 Monitor Vacuum Flow and Consumption

Take the S401 and an absolute pressure sensor as an example. Follow steps below to create and view a virtual channel for a vacuum flow.

1. Create a pressure channel using the **SDI & analog input** or **Modbus Input** menu according to your actual condition.
2. Create a flow channel and a consumption channel for S401 using the **SDI & analog input** menu.

[3]	My Device(E)		Terminal E	Pr. 1.6 bar abs.	bar	0.01
[4]	My Device(M)		S401	Flow	m³/h	0.1
[5]	My Device(M)		S401	Consumption	m³	1

3. Create the virtual channel for flow:
   a. Select the S401 flow channel. In the example, it is Index [4]. Now in the **Formula** field, **[4]** appears.

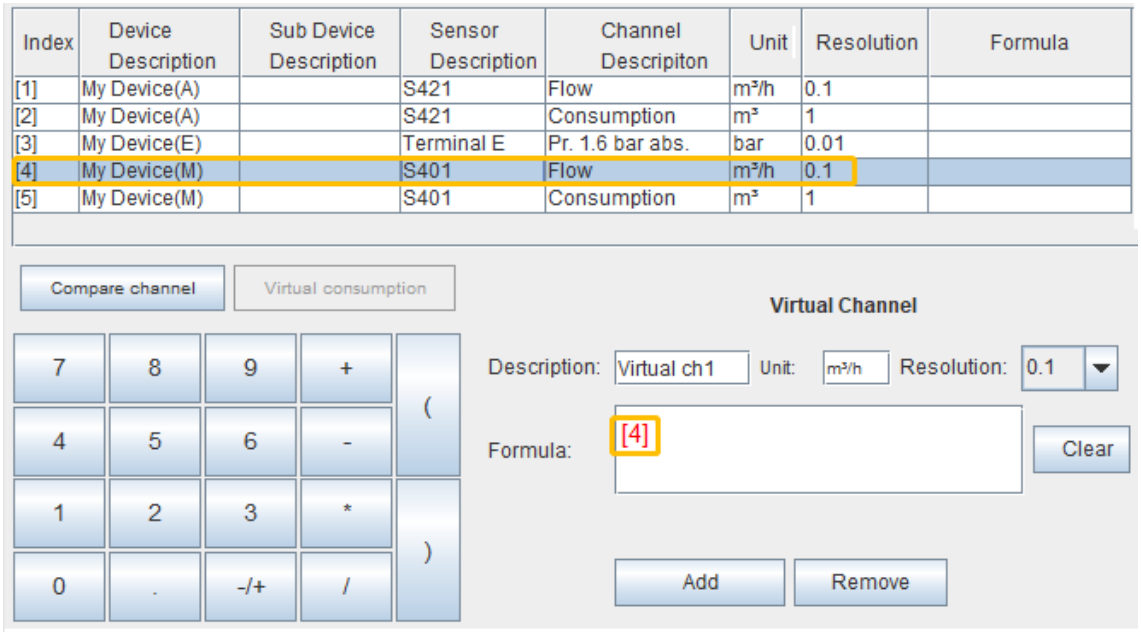

b. Click * and **1000** on the onscreen numeric keypad. Now the Formula is as follows:

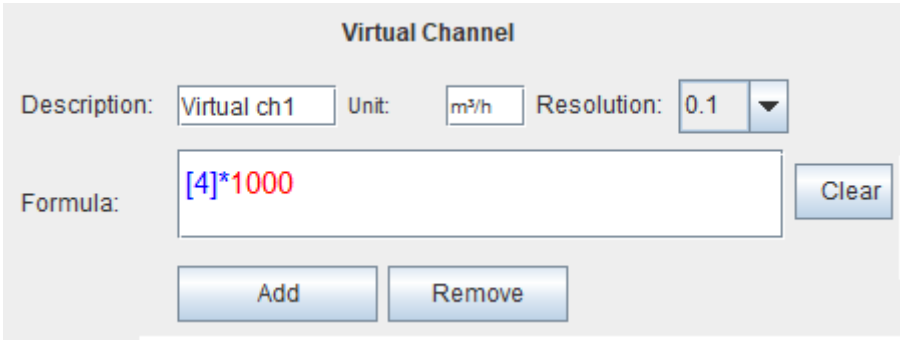

c. Click **/** on the onscreen numeric keypad, and then select the absolute pressure channel. In this example, it is Index[3].

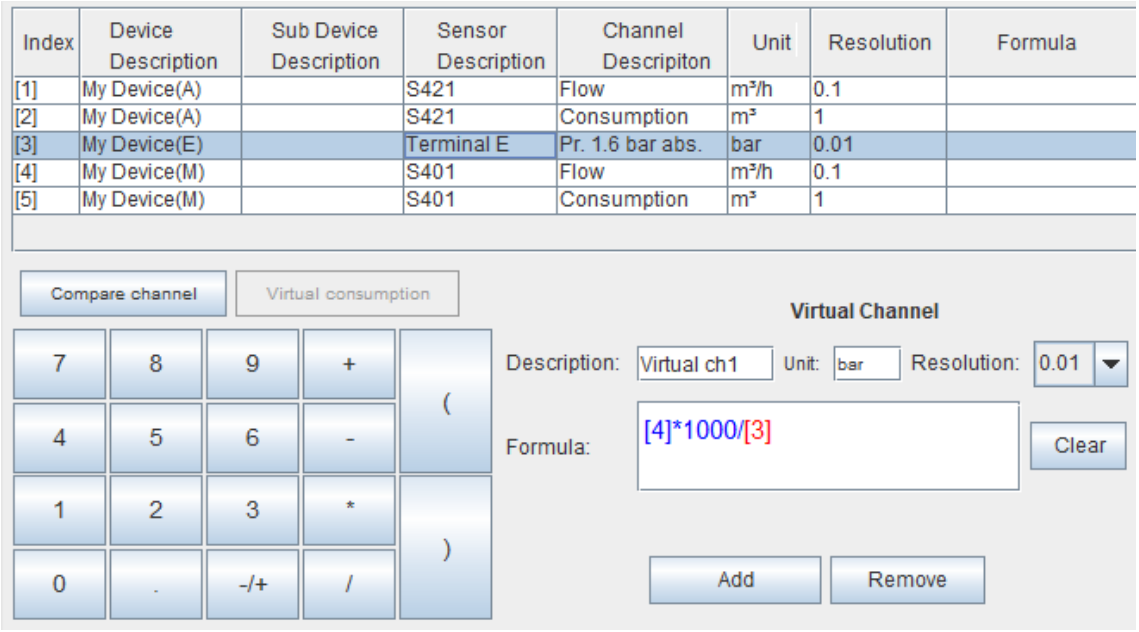

d. Change the **Unit** "bar" to "**m³/h**", and **Resolution** "0.01" to "**0.1**" to match the flow attributes. You can also change the **Description**.

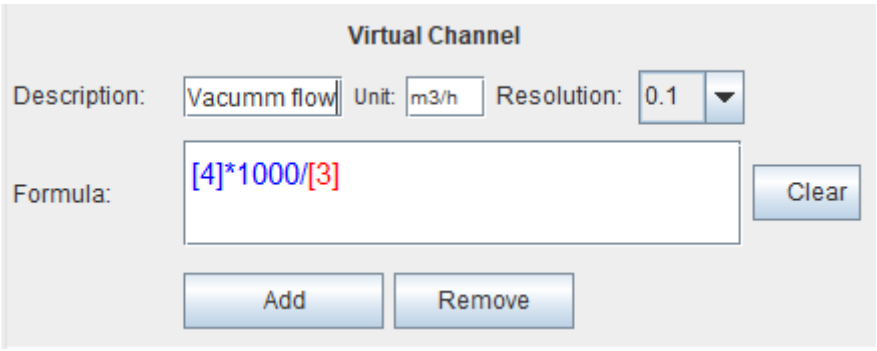

e. Click **Add** to create the virtual channel for vacuum.

Index	Device Description	Sub Device Description	Sensor Description	Channel Descripiton	Unit	Resolution	Formula
[1]	My Device(A)		S421	Flow	m³/h	0.1	
[2]	My Device(A)		S421	Consumption	m³	1	
[3]	My Device(E)		Terminal E	Pr. 1.6 bar abs.	bar	0.01	
[4]	My Device(M)		S401	Flow	m³/h	0.1	
[5]	My Device(M)		S401	Consumption	m³	1	
[6]	My Device(V)		Vacuum flow	Vacuum flow	m3/h	0.1	[4]*1000.0/[3]

4. Create virtual consumption channel:
   Select the virtual flow channel that you want to calculate the consumption, and then click **Virtual consumption**.

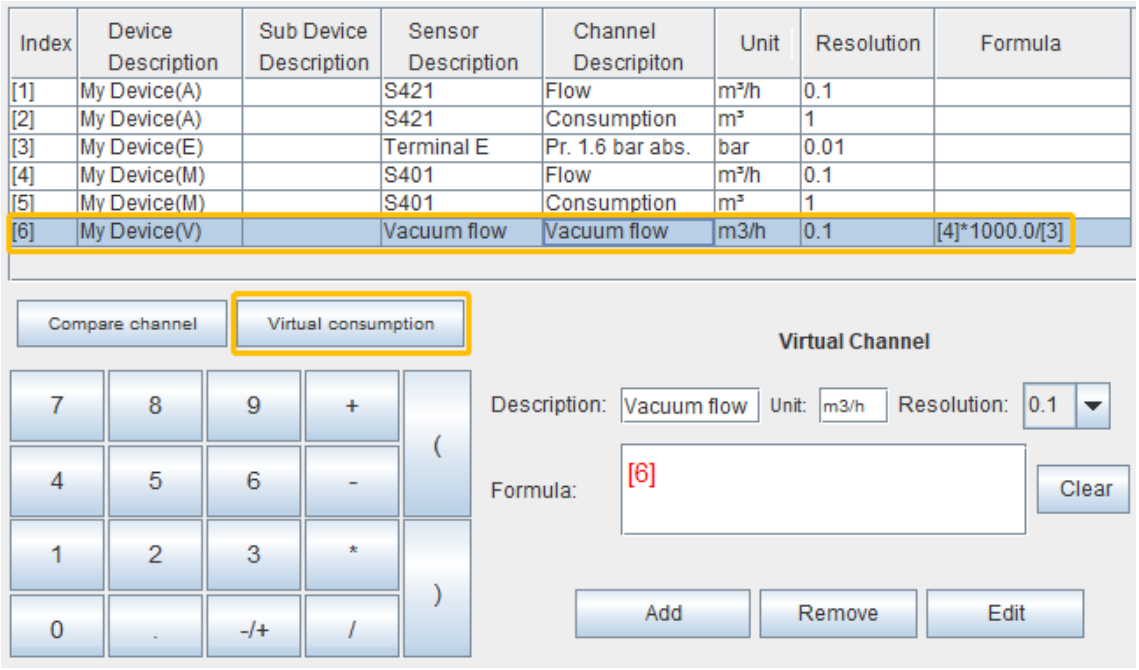

A virtual consumption channel is automatically created in the list. In this example, it is Index [7].

Index	Device Description	Sub Device Description	Sensor Description	Channel Descripiton	Unit	Resolution	Formula
[1]	My Device(A)		S421	Flow	m³/h	0.1	
[2]	My Device(A)		S421	Consumption	m³	1	
[3]	My Device(E)		Terminal E	Pr. 1.6 bar abs	bar	0.01	
[4]	My Device(M)		S401	Flow	m³/h	0.1	
[5]	My Device(M)		S401	Consumption	m³	1	
[6]	My Device(V)		Vacuum flow	Vacuum flow	m3/h	0.1	[4]*1000.0/[3]
[7]	My Device(V)		Vacuum flow	Consumption	m3	1	totalizer([6])

Note: You do not need to configure the formula for the consumption channel because the calculation formula between the flow and consumption is written in the S330/S331.

5. Click **Display** on the S4C-Dispaly to add the virtual channels to a measuring point.
6. Click **Final** > **Download Configuration into Device** to save the virtual channels to the S330/S331.
7. Set the initial consumption: click **Sensor settings** menu on the S330/S331 touch screen. For more information, see section 10.5.4 Vacuum Flow Sensor (Virtual Sensor).
8. View the vacuun flow and consumption created in the virtual channel: on the S330/S331 screen, click **Value** in the lower menu

bar, then select the **Location** where the virtual channels are. An example is shown below.

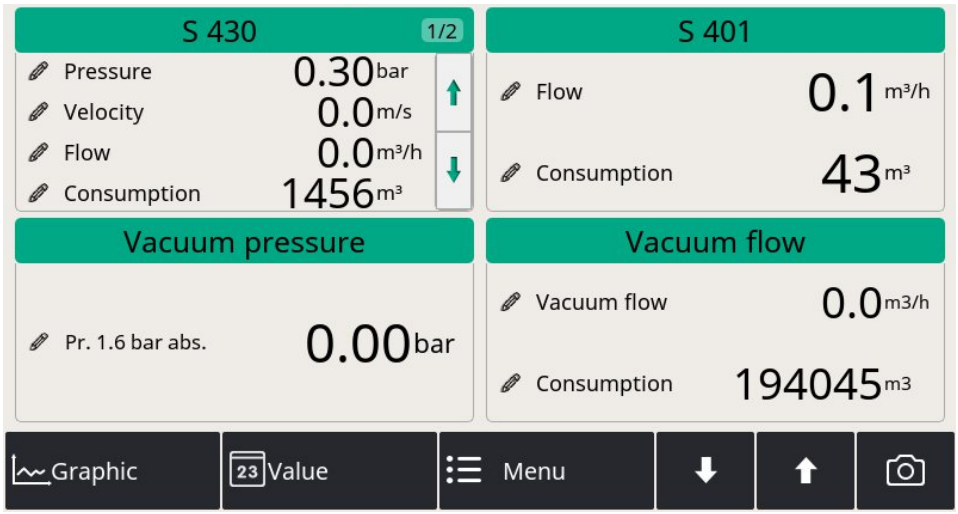

14.1.2 Monitor Flow or Consumption for Several Branch Lines

Another application of the virtual channel is to measure a total flow or consumption for several branch lines.

This section takes flow channel and consumption channel of the S418 and S401 as an example. The 4 channels have been created as below:

Index	Device Description	Sub Device Description	Sensor Description	Channel Descripiton	Unit	Resolution	Formula
[1]	My Device(E)		Terminal E	0 - 20 mA	mA	0.001	
[2]	My Device(E)		Terminal E	Counter	I	1	
[3]	My Device(M)		S418	flow	m3/h	0.1	
[4]	My Device(M)		S418	comsumption	m3	1	
[5]	My Device(M)		Third-Party-1	CH 1	%	1	
[6]	My Device(M)		S401	Flow	m³/h	0.1	
[7]	My Device(M)		S401	Consumption	m³	1	
[8]	My Device(M)		Pressure 16 bar(g)	Pressure	bar	0.01	

Follow steps below to create and view the total flow and total consumption channels:

1. Create the entire flow channel:
    a. Select the S418 flow channel. In the example, it is Index [3]. Now in the **Formula** field, **[3]** appears.
    b. Click **+** on the onscreen numeric keypad. Then select the S401 flow channel. In the example, it is Index [6]. You can change the text in the Description field, and this will be the name of this virtual channel.

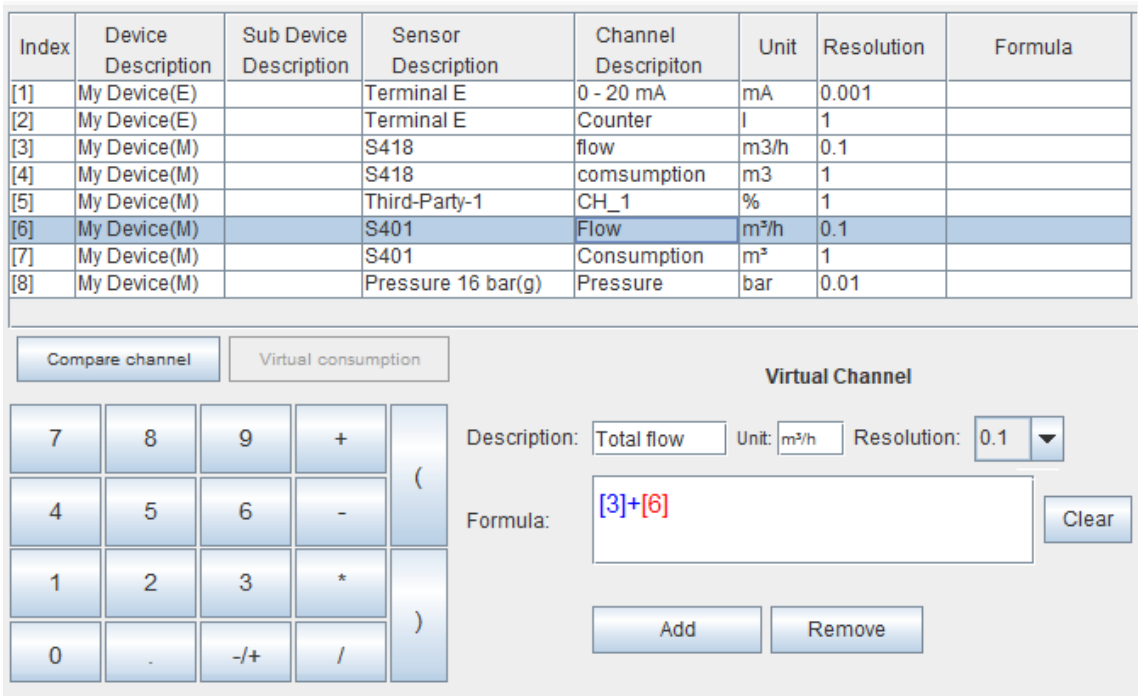

Index	Device Description	Sub Device Description	Sensor Description	Channel Descripiton	Unit	Resolution	Formula
[1]	My Device(E)		Terminal E	0 - 20 mA	mA	0.001	
[2]	My Device(E)		Terminal E	Counter	l	1	
[3]	My Device(M)		S418	flow	m3/h	0.1	
[4]	My Device(M)		S418	comsumption	m3	1	
[5]	My Device(M)		Third-Party-1	CH_1	%	1	
[6]	My Device(M)		S401	Flow	m³/h	0.1	
[7]	My Device(M)		S401	Consumption	m³	1	
[8]	My Device(M)		Pressure 16 bar(g)	Pressure	bar	0.01	

c. Click Add to create the virtual channel for the total flow.

2. Select the consumption channels of the S418 and S401. Then use the same way in the step 1 to create the total consumption channel.
   Two virtual channels are created as below: Index [9] and Index [10].

Index	Device Description	Sub Device Description	Sensor Description	Channel Descripiton	Unit	Resolution	Formula
[1]	My Device(E)		Terminal E	0 - 20 mA	mA	0.001	
[2]	My Device(E)		Terminal E	Counter	l	1	
[3]	My Device(M)		S418	flow	m3/h	0.1	
[4]	My Device(M)		S418	comsumption	m3	1	
[5]	My Device(M)		Third-Party-1	CH_1	%	1	
[6]	My Device(M)		S401	Flow	m³/h	0.1	
[7]	My Device(M)		S401	Consumption	m³	1	
[8]	My Device(M)		Pressure 16 bar(g)	Pressure	bar	0.01	
[9]	My Device(V)		Total flow	Total flow	m³/h	0.1	[3]+[6]
[10]	My Device(V)		Total consumption	Total consumption	m³	1	[4]+[7]

3. Click **Display** on the S4C-Dispaly to add the virtual channels to a measuring point.
4. Click **Final** > **Download Configuration into Device** to save the virtual channels to the S330/S331.
5. View the vacuun flow and consumption created in the virtual

channel: on the S330/S331 screen, click **Value** in the lower menu bar, then select the **Location** where the virtual channels are.

14.2 Monitor Compressor Run Time

S330/S331 enables you to monitor the total run time of a compressor by configuration.

To enable the monitoring by configuration

1. Connect a relay signal from a compressor to Terminal E or F on the S330/S331. For more information, see case E or F in Section 8.2.8 .
2. Connect the S330/S331 with a computer installed with S4C-Display.
3. Launch the **S4C-Display**.
4. In the **SDI&Analog Input** menu, configure the Channel 2 of Terminal E or F as shown in the following figures. Detailed settings are as follows:
   - Measurement type: Select **Compressor**.
   - Description: Enter a display name for the channel.

   Note: The configuration is to enable the channel to receive the relay signal from a compressor. By accumulating the time spans during which the relay contact is closed, the S331/S330 can show you the compressor load time, unload time, and the total run time.

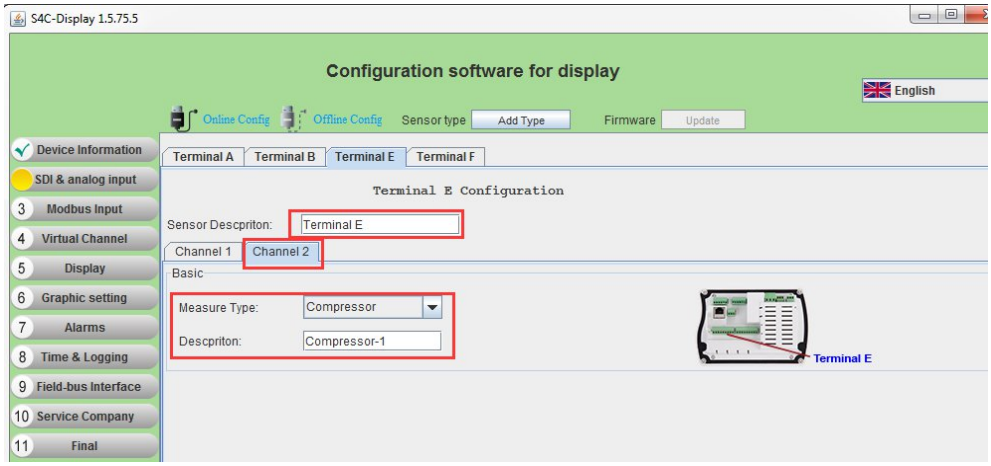

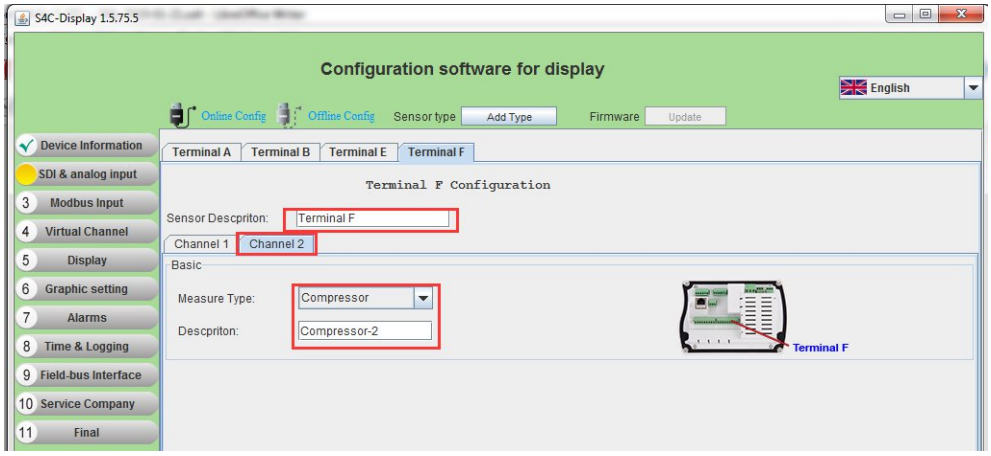

To reset the compressor run time, reset the Channel 2 on Terminal E or F. See the following figure for details.

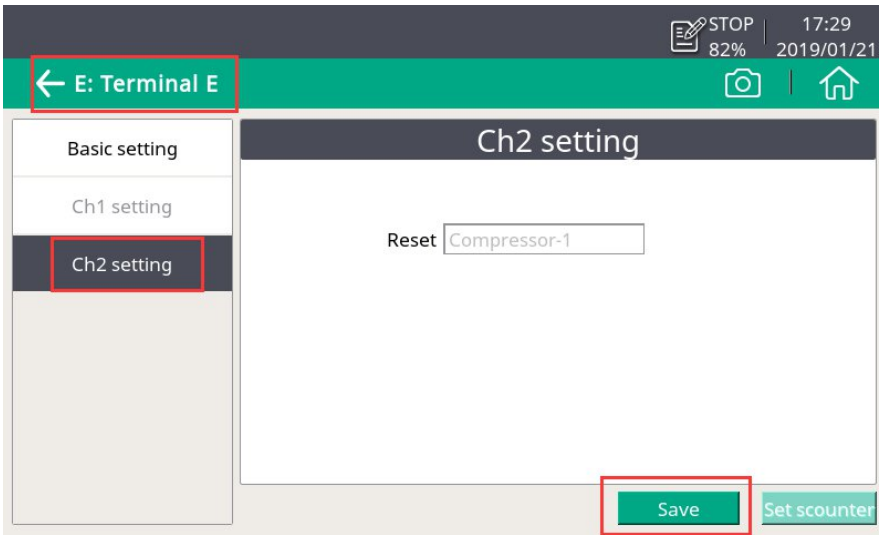

Please note that if you reset Channel 2 on a Terminal, measurement data on both Channels will be reset.

As shown in the following example, the running hours of the two corresponding compressors are cleared to zero.

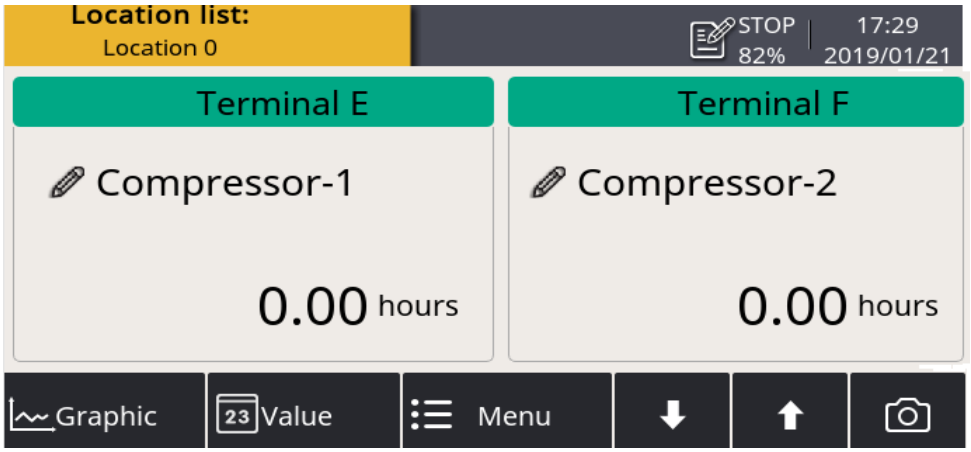

15 Firmware Update

This section describes how to update the S330/S331 firmware and data logger. You can update the firmware using the S4C-Display software or the USB stick supplied with the S330/S331.

15.1 Update using S4C-Display

15.1.1 Preparation

- A PC with S4C-Display software installed.
  The S4C-Display software can be downloaded from www.suto-itec.com.
- Internet connection.
- A USB cable (USB A–micro) which is supplied with the S330/S331.
- Firmware file, which can be downloaded from www.suto-itec.com.
- The S330/S331 connected to power and booted until you see the value screen.
- Connect the USB cable to your PC and the S330/S331 (open the yellow front cover) and wait until the drivers are automatically installed. To install the drivers automatically you need an Internet connection and Windows automated driver download must be enabled.

15.1.2 Update Steps

Follow the instructions below to update the S330/S331 firmware.

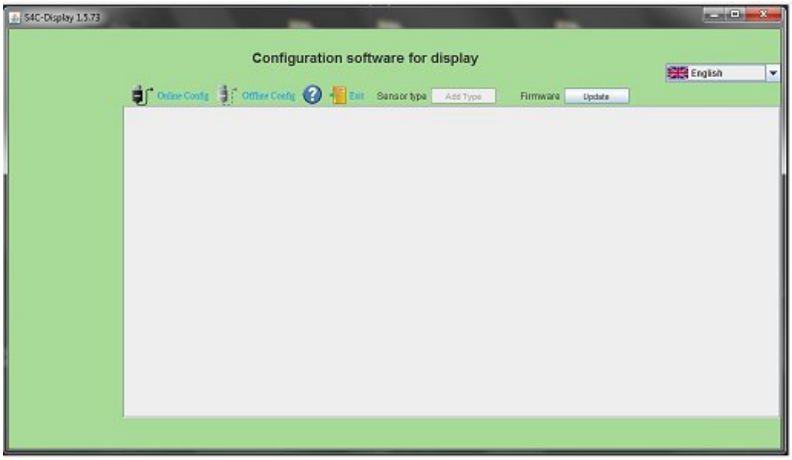

1. Start the Software.

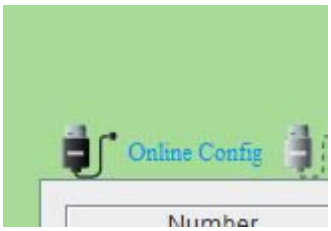

2. Click **Online Config**.

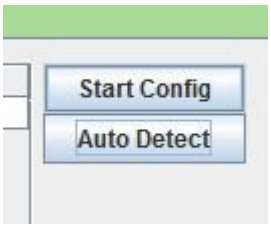

3. Click **Auto Detect**.



4. The device will appear in the list.

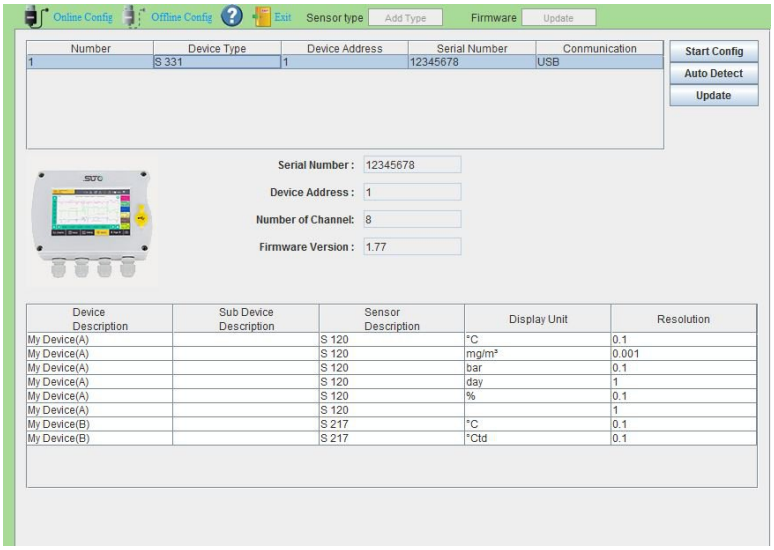

5. Select the device by clicking on the line. (it turns blue.)

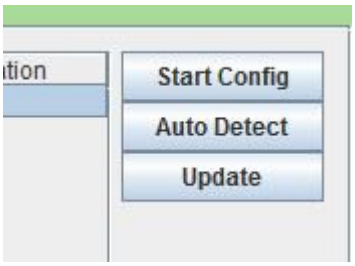

6. Click **Update**.

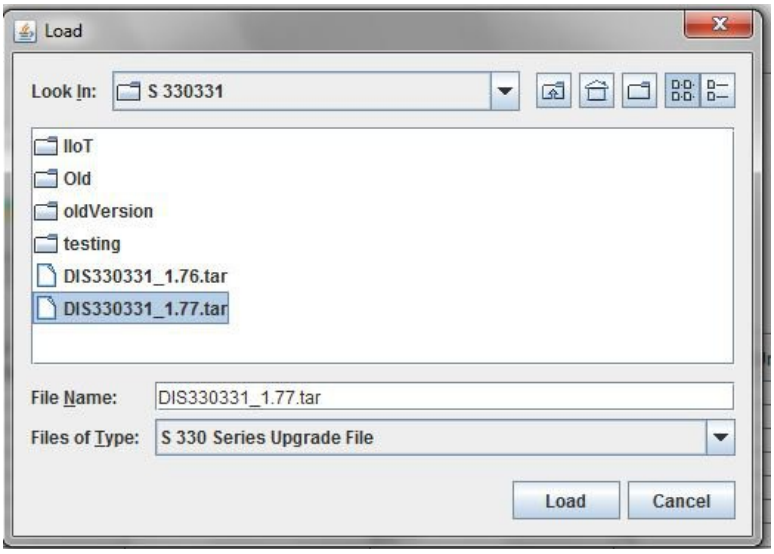

7. Select the Firmware file (.tar file) from your PC folder.

And click **Load**.

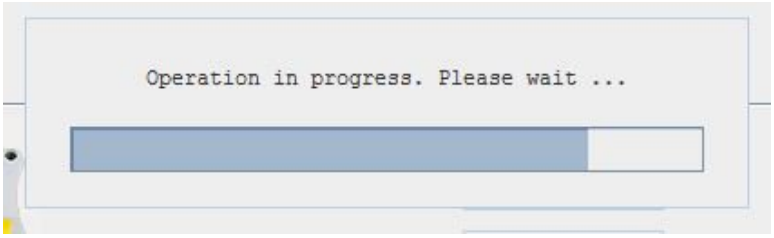

8. Wait until the update is finished.
Note: Do not turn on the power or disconnect the USB.



9. Wait until the device has booted again to the values screen.
You can now see the latest firmware.

15.2 Update using a USB Stick

15.2.1 Preparation

- A PC with USB type-A port.
- A type-C USB stick.
- Insert the USB stick to the PC.
- Download the firmware from www.suto-itec.com to the USB disk.
  Note: The filename suffix of the firmware ≥ V2.1 is *suto*.
  The filename suffix of the firmware < V2.1 is *tar*.

15.2.2 Update Steps

1. Insert the USB stick into the S330/S331.
2. After the  icon appears on the S330/S331 display, click **Menu** > **System settings** > **System update**, and the window below appears.

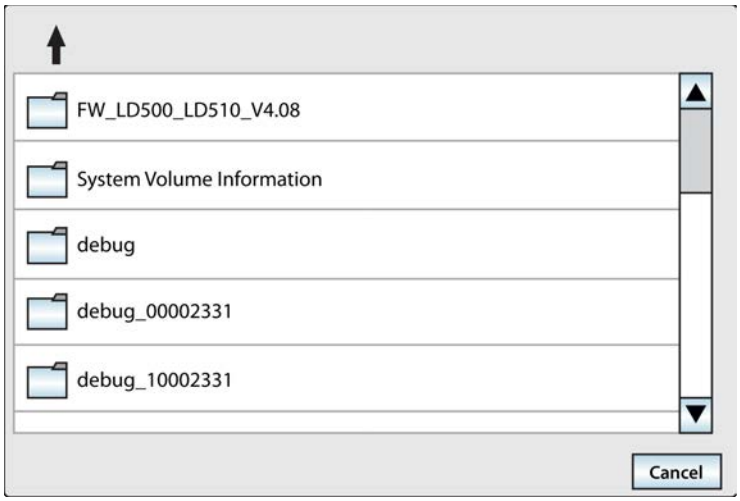

3. Select the right firmware, and click **Yes**. The firmware update starts.
4. After the update is done, the S330/S331 restart automatically.

16 Optional Accessories

The S330/S331 can be ordered with below options or accessories:

- Analog input card with two analog inputs 0 ... 20 mA/ 4… 20 mA/ 0… 10 V and 2 pulse inputs (A1662).
- Connection board for looping 4 ... 20 mA and pulse signal to PLC, and mountable-in-wall casings A1666 and A1668.
- USB 4G dongle, including S4A software (A1670).
- USB 4G dongle protection case, with extension cable 2 m and M12 connector (A554 0131).
- 8-channel relay module (A1510)

17 Maintenance

To clean the device it is recommended to use moist cloth only.



ATTENTION!

Do not use isopropyl alcohol to clean the display!

18 Disposal of Waste



Electronic devices are recyclable material and do not belong in the household waste.

The device, the accessories and its packings must be disposed according to your local statutory requirements. The dispose can also be carried by the manufacturer of the product, for this please contact the manufacturer.

19 Appendix A – Modbus Interface

The default settings of the Modbus interface are as follows:

Mode	:	TCP
DHCP	:	Yes
MAC	:	Set ex-factory
IP address	:	Dynamic or Static
Subnet	:	Dynamic or Static
Gateway	:	Dynamic or Static
Timeout	:	≥ 200 ms

Mode	:	RTU
Baud rate	:	19200
Device address	:	1
Framing / parity / stop bit	:	8, N, 1
Response time	:	1 second
Response delay	:	0 ms
Inter-frame spacing	:	7 char

Response message that the device returns to the master:

- Function code: 03

The information of the byte order is shown in the table below:

Byte Order	Sequence				Data Type
	1st	2nd	3rd	4th	
1-0-3-2	Byte 1 (MMMMMMMM*)	Byte 0 (MMMMMMMM *)	Byte 3 (SEEEEEEE)	Byte 2 (EMMMMMMM *)	FLOAT
1-0-3-2	Byte 1	Byte 0 LSB	Byte 3 MSB	Byte 2	UINT32 INT32
1-0	Byte 1 MSB	Byte 0 LSB	---	---	UINT16 INT16
1-0	Byte 1 XXX *	Byte 0 DATA	---	---	UINT8 INT8

* S: Sign, E: Exponent, M: Mantissa, XXX: no value

Explanations of MSB and LSB

MSB	MSB refers to Most Significant Byte first, which follows the Big-Endian byte order. For example, if the main system follows the MSB first order: When the 4-byte floating number, in the order of Byte1-Byte0-Byte3-Byte2, is received from the slave (sensor), the master must change the byte order to Byte3-Byte2-Byte1-Byte0 for the correct display of the value.
LSB	LSB refers to Least Significant Byte first, which follows the Little-Endian byte order. For example, if the main system follows the LSB first order: When the 4-byte floating number, in the order of Byte1-Byte0-Byte3-Byte2, is received from the slave (sensor), the master must change the byte order to Byte0-Byte1-Byte2-Byte3 for the correct display of the value.

20 Appendix B – Power Consumption of Sensors

The Compact and Flex S330/S331 can provide a maximum 10 W and 50 W power supply separately to connected sensors. The following table shows the power consumption of the sensors supported by S330/S331. If the total power consumption of connected sensors is greater than 10 W (Compact version) or 50 W (Flex version), please use an external power source.

Device/Sensor	Power consumption [W]	
	Without display	With display
S401 / S421	4.8	5.8
S430	1.8	2.2
S450 / S452	4.5	4.8
S451 / S453	N/A	4.3 (Heater off) 5.0 (Heater on)
S211/S215/S220 (2-wire)	0.5	N/A
S211/S215/S220 (3-wire)	1.0	1.2
S211/S215/S220 (Modbus/RTU)	1.0	1.2
S211/S215/S220 (With pressure sensor)	1.0	1.2
S110	1.0	N/A

Device/Sensor	Power consumption [W]	
S120	5	10
S130/S132	5	10
Pressure Transmitter	0.5	N/A
Electrical Current Transmitter	0.8	N/A
S111/S111-UL	N/A	3.5
S040	0.015	N/A

SUTO iTEC GmbH
Grißheimer Weg 21
D-79423 Heitersheim
Germany

Tel: +49 (0) 7634 50488 00
Email: sales@suto-itec.com
Website: www.suto-itec.com

SUTO iTEC (ASIA) Co., Ltd.
Room 10, 6/F, Block B, Cambridge Plaza
188 San Wan Road, Sheung Shui, N.T.
Hong Kong

Tel: +852 2328 9782
Email: sales.asia@suto-itec.com
Website: www.suto-itec.com

SUTO iTEC Inc.
5460 33rd St SE
Grand Rapids, MI 49512
USA

Tel: +1 (616) 800-7886
Email: sales.us@suto-itec.com
Website: www.suto-itec.com

SUTO iTEC (Thailand) Co., Ltd.
Head Office: 91/66 Suwinthawong Rd,
Minburi Bangkok 10510
Thailand

Tel: +66 (0)2108 9658
Email: sales.th@suto-itec.com
Website: www.suto-itec.com

All rights reserved © Modifications and errors reserved