Installation and
Operation Manual

Be smart. Measure it.

S211/S215/S220

Dew Point Transmitter



English

www.suto-itec.com

Dear Customer,

Thank you for choosing our product.

The operating instructions must be read in full and carefully observed before starting up the device. The manufacturer cannot be held liable for any damage which occurs because of non-observance or non-compliance with this manual.

Should the device be tampered with in any manner other than a procedure which is described and specified in the manual, the warranty is cancelled and the manufacturer is exempt from liability.

The device is destined exclusively for the described application.

SUTO offers no guarantee for the suitability for any other purpose. SUTO is also not liable for consequential damage resulting from the delivery, capability or use of this device.

Revision: 2026-2

Last modifications: : August, 2026

Table of contents

1 Safety Instructions ····· 4
2 Registered Trademarks ····· 6
3 Application ····· 7
4 Features ····· 7
5 Technical Data ····· 8
5.1 General ····· 8
5.2 Electrical Data ····· 9
5.3 Output Signals ····· 9
5.4 Accuracy ····· 10
6 Dimensional Drawing ····· 11
7 Measurement of Dew Point Temperature and Humidity ····· 13
7.1 Dew Point Temperature ····· 13
7.2 Pressure Dew Point ····· 13
7.3 Humidity ····· 13
7.4 Atmospheric Dew Point in a Pressurized System ····· 14
8 Installation ····· 15
8.1 Installation Requirements ····· 16
8.2 Installation Procedure ····· 17
8.2.1 Install with Measuring Chamber A699 3491 ····· 17
8.2.2 Install with By-pass Measuring Chamber A699 3493 ····· 18
8.2.3 Install without Measuring Chamber ····· 20
8.3 Remove the Dew Point Transmitter ····· 21
8.4 Electrical Connection ····· 22
8.5 Connection to Customer Equipment ····· 23
9 Display (Option) ····· 25
9.1 Display Information ····· 25
9.2 Compatibility ····· 25
9.3 Displayed Values ····· 25
9.4 Display Rotation ····· 25
10 Signal Outputs ····· 26
10.1 Analog Output ····· 26
10.1.1 Scaling ····· 26
10.2 Modbus/RTU Interface ····· 26
10.2.1 Holding Register Table for Modbus/RTU ····· 28
10.2.2 Connect Modbus/RTU Devices to a Master ····· 30
11 Optional Accessories ····· 34
11.1 Measuring Chambers ····· 34
11.2 Wireless DP Transmitter Adapter ····· 34
12 Calibration ····· 35
13 Maintenance ····· 35
14 Disposal of Waste ····· 35

1 Safety Instructions

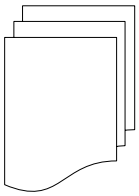

Please check if this instruction manual matches with the product type.

Please observe all notes and instructions indicated in this manual. It contains essential information which must be observed before and during installation, operation and maintenance. Therefore, this instruction manual must be read carefully by the technician as well as by the responsible user or qualified personnel.

This instruction manual must be available at the operation site of the Dew Point Transmitter at any time. If anything is unclear or you have questions regarding this manual or the product, please contact the manufacturer.



WARNING!

Compressed air!

Any contact with quickly escaping air or bursting parts of the compressed air system can lead to serious injuries or even death!

- Do not exceed the maximum permitted pressure range (see sensors label).
- Only use pressure tight installation material.
- Ensure that nobody can be hit by escaping air or bursting parts of the instrument.
- The system must be pressure-less during maintenance work.



WARNING!

Voltage used for supply!

Any contact with energized parts of the product, may lead to an electrical shock which can lead to serious injuries or even death!

- Consider all regulations for electrical installations.
- The system must be disconnected from any power supply during maintenance work.
- Any electrical work on the system may only be carried out by authorized, qualified personnel.



CAUTION!

Permitted operating parameters!

Observe the permitted operating parameters, any operation exceeding the parameters can lead to malfunctions and may lead to damage on the instrument or the system.

- Do not exceed the permitted operating parameters.
- Make sure the product is operated in its permitted limitations.
- Do not exceed or undercut the permitted storage and operation temperature and pressure.

General safety instructions

- It is not allowed to use the product in explosive areas.
- Please observe the national regulations before/during installation and operation.

Remarks

- It is not allowed to disassemble the product.
- Always use a spanner (wrench) to mount the product properly.



CAUTION!

Measurement values can be affected by malfunction!

The product must be installed properly and frequently maintained, otherwise it may lead to wrong measurement values, which can lead to wrong results.

Storage and transportation

- Make sure that the transportation temperature of the instrument is between -30 ... +70°C.
- For transportation it is recommended to use the packaging which comes with the instrument.
- Please make sure that the storage temperature of the instrument is between -20 ... +50°C.
- Avoid direct UV and solar radiation during storage.
- For the storage the humidity must be <95% rH, no condensation.

2 Registered Trademarks

SUTO®

Registered trademark of SUTO iTEC

MODBUS®

Registered trademark of the Modbus Organization, Hopkinton, USA

3 Application

The S211 / S215 / S220 are industrial Dew Point Transmitters designed for measuring dew point and related parameters in compressed air or industrial gases under specified operating conditions (See next page).

Parameter	Default unit
Temperature	°C
Humidity	% rH
Dew point	°C Td
Pressure (optional)	bar(g)
Remark: You can change the units using the Wireless DP Transmitter Adapter (optional) and the S4C-DP App.	

The S211 / S215 / S220 Dew Point Transmitters are mainly used in compressed air systems in the industrial environment and not developed to be used in explosive areas. To use them in explosive areas, contact the manufacturer.

4 Features

- Three Dew Point Transmitter models applicable for different measuring ranges:
- S211 measures down to -60°C Td
- S215 measures down to -20°C Td
- S220 measures down to -100°C Td
- Optional display for on-site values. The display can be rotated 340° horizontally to ease your access to readings.
- Various signal output options: 4 ... 20 mA 2-wire, 4 ... 20 mA 3-wire, or 4 ... 20 mA 3-wire + Modbus/RTU.
- Optional integrated pressure sensor.
- IP65 casing provides robust protection in rough industrial environment.
- Very fast response time ensures safe and reliable indication whenever dew points are out of valid ranges.
- High accuracy dew point measurement over the whole range.

5 Technical Data

5.1 General

CE			
Parameters	Standard unit dew point: °C Td Standard unit temperature: °C other units: °F, K Standard unit humidity: % rH Standard unit pressure: bar (g)		
Principle of measurement	Capacitive method and frequency method		
Measuring range	Type	Range	
	S211	Dew point Relative Humidity Temperature Pressure (optional)	: -60 ... +20°C Td : 0 ... 90 % rH : -30 ... +70°C : 0 ... 1.6 MPa
	S215	Dew point Relative Humidity Temperature Pressure (optional)	: -20 ... +50°C Td : 0 ... 90 % rH : -30 ... +70°C : 0 ... 1.6 MPa
	S220	Dew point Relative Humidity Temperature Pressure (optional)	: -100 ... +20°C Td : 0 ... 90 % rH : -30 ... +70°C : 0 ... 1.6 MPa
Sensor	S215 / S211: Polymer S220: QCM + Polymer Temperature sensor: Pt100 Pressure sensor: Piezo resistive type		
Measuring medium	Air, Argon, O_2, N_2, CO_2*		
Response time (T_{90}) @4 l/min	S211	0 °C Td ⟶ -60 °C Td ≤ 280 sec -60 °C Td ⟶ 0 °C Td ≤ 65 sec	
	S215	0 °C Td ⟶ -20 °C Td ≤ 50 sec -20 °C Td ⟶ 0 °C Td) ≤ 35 sec	
	S220	0 °C Td ⟶ -80 °C Td ≤ 420 sec -80 °C Td ⟶ 0 °C Td ≤ 90 sec	
Ambient temperature	-20… +70 °C		
Ambient humidity	0 ... 95% rH		
Operating pressure	0 ... 1.6 MPa		

	0 ... 35.0 MPa optional for S215 / S211
Casing material	Casing: Aluminium alloy Process thread: Stainless steel 1.4301 (SUS 304) Display cover: PC + ABS
Protection class	IP65
Display (optional)	0.66” OLED display for displaying the measured value and unit 340° horizontally rotatable**
Dimensions	See dimensional drawing on the page 11
Screwing thread	G ½” thread (ISO 228/1)
Weight	180 g
* For CO_2, the measurement range of S211 is limited to -40°C Td ** The rotation force cannot exceed 3.0 N.m	

5.2 Electrical Data

Power supply	15 ... 30 VDC
Current consumption	2-wire: 4 ... 20 mA 3-wire: 40 mA @ 24 VDC 3-wire with display: 50 mA @ 24 VDC

5.3 Output Signals

Analog output	4 ... 20 mA 3-wire or 4 ... 20 mA 2-wire		
Analog output scaling	Type	Scaling	
	S211	4 mA 20 mA	= -60°C Td = +20°C Td
	S215	4 mA 20 mA	= -20°C Td = +50°C Td
	S220	4 mA 20 mA	= -100°C Td = +20°C Td
Modbus output	Modbus/RTU		
Modbus communication	Mode: RTU Baud rate: 19200 Device address: last 2 digits of serial number Framing / parity / stop bit: 8 / N / 1 Response time: 1 second Response delay: 0 ms Interframe spacing: 7 char		

5.4 Accuracy

Accuracy	Dew point: ±1 °C Td (0 ... 20°C Td) ±2 °C Td (-70 ... 0 / +20 ... +50 °C Td) ±3 °C Td (-100 ... -70 °C Td) Temperature: ± 0.3°C Pressure: 0.5% FS
Repeatability of dew point	±0.5 °C
Stated accuracy at	Ambient/process temperature 23 °C ± 3 °C Ambient/process humidity <95% rH, no condensation Airflow > 2 l/min at sensor tip
Flow rate	To reach a fast response time please ensure a flow rate of 2... 5 l/min at the sensor tip. **Note**: If the Measuring chamber A699 3491 is used, this flow rate will be maintained by the chamber at a pressure > 0.3 MPa.

6 Dimensional Drawing

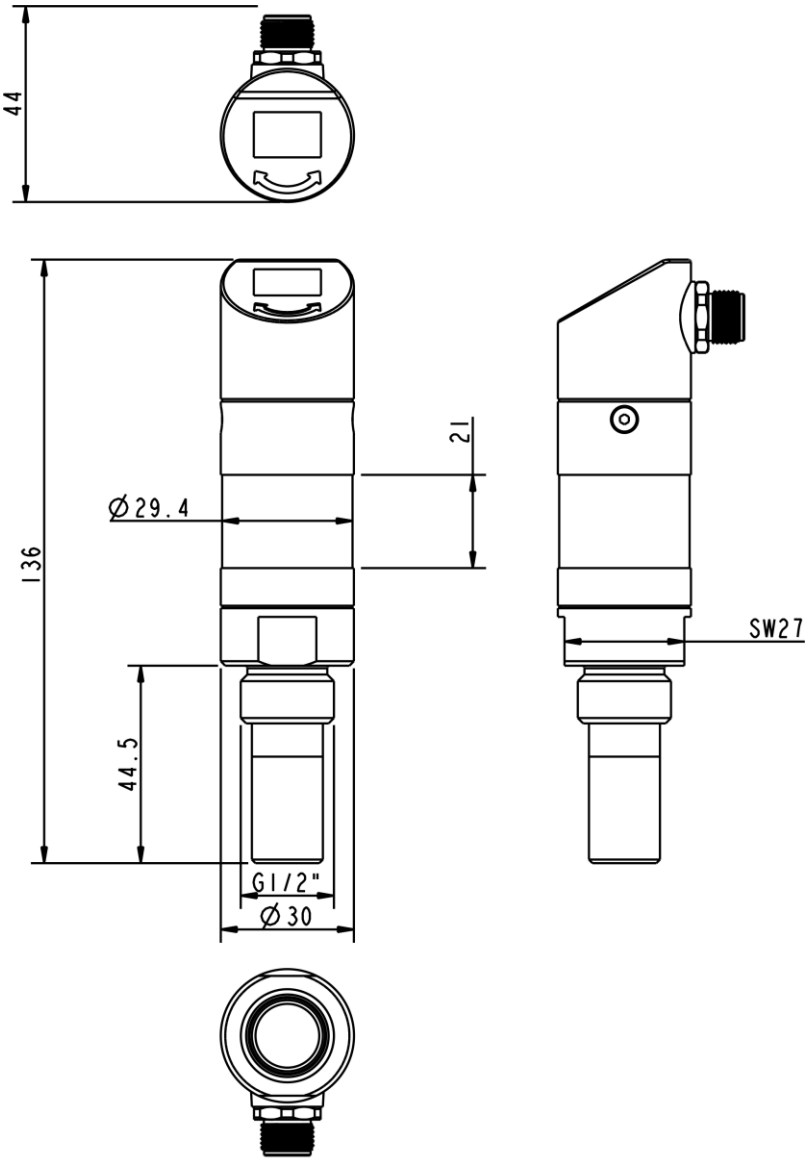

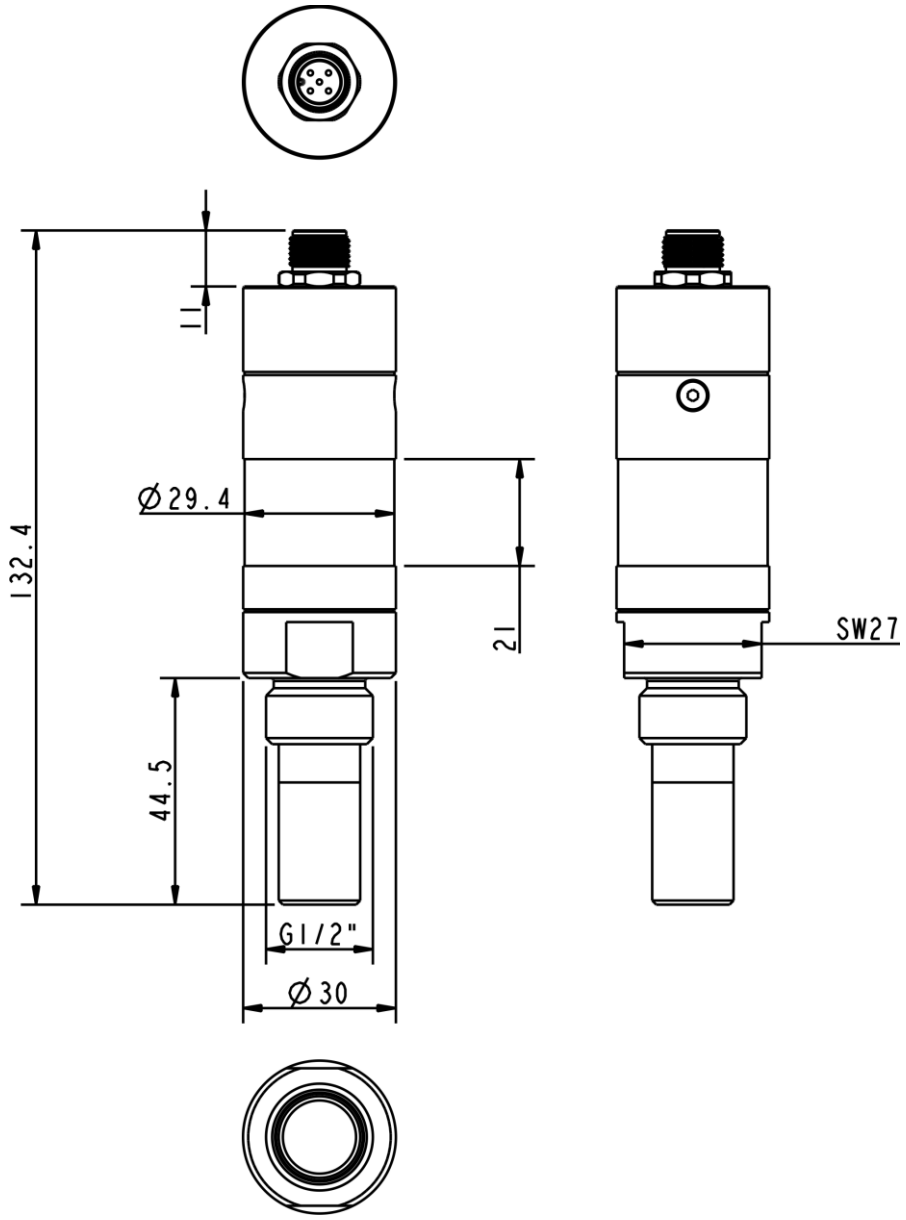
11
132.4
Ø29.4
21
SW27
44.5
G1/2"
Ø30

7 Measurement of Dew Point Temperature and Humidity

7.1 Dew Point Temperature

The dew point in compressed air systems is the temperature at which the moisture in the compressed air becomes saturated, causing condensation. It is a critical parameter in ensuring the quality and efficiency of compressed air. The correct term for negative dew point temperatures is frost point, although it is often simply referred to as dew point.

7.2 Pressure Dew Point

The Dew Point Transmitter always displays the pressure dew point, which is the dew point temperature specific to the pressure at which it is installed in the compressed air system.

- Pressure specific measurement: The Dew Point Transmitter measures the dew point at the exact pressure of the compressed air, ensuring that the readings accurately reflect the conditions in the system in which it is installed.

7.3 Humidity

The Dew Point Transmitter not only displays the pressure dew point, but also the relative humidity at the given pressure of the compressed air system.

- Relative humidity measurement: The Dew Point Transmitter displays relative humidity, which is the amount of moisture in the air compared to the maximum amount of moisture the air can hold at that specific temperature and pressure.

7.4 Atmospheric Dew Point in a Pressurized System

When integrated with a pressure sensor, the Dew Point Transmitter can directly measure the atmospheric dew point in pressurized systems. An atmospheric measurement chamber is not required.

- No special measurement chamber required: The Dew Point Transmitter integrated with a pressure sensor can output the atmospheric dew point directly, eliminating the need for a special atmospheric measuring chamber.
- Automatic calculation of the atmospheric dew point: The integrated pressure sensor measures the system pressure, enabling the Dew Point Transmitter to automatically calculate and display the atmospheric dew point based on real-time pressure conditions.

8 Installation

Before installing the device, make sure that all components listed below are included in your package.

Qty	Description	Item no. (Model dependent)		
1	Dew Point Transmitter	S211 S699 1211 S699 2211 S699 3211 S699 4211	S215 S699 1215 S699 2215 S699 3215 S699 4215	S220 S699 1220 S699 2220 S699 3220 S699 4220
1	Depending on orders: M12 plug or M12 cable	Plug: C219 0059 Cable: A553 0104/A553 0105		
1	Instruction manual	No P/N		
1	Calibration certificate	No P/N		

The 3 Dew Point Transmitters S211, S215 and S220 are offered in different versions. Depending on the version the options might be different, see table below for an overview about the different models, their signal output and available options.

Dew Point Transmitter versions	
S699 1xxx	Dew Point Transmitter with 2-wire analog & SDI output
S699 2xxx	Dew Point Transmitter with 3-wire analog & SDI output
S699 3xxx	Dew Point Transmitter with 3-wire analog & Modbus/RTU output
S699 4xxx	Dew Point Transmitter incl. integrated pressure sensor with 3-wire analog & Modbus/RTU output

Options	
A1381	High pressure option 0... 35.0 MPa (only available for S215 & S211, not available for S699 4xxx versions)
A1387	OLED Display option for 3-wire Analog version (only for S699 2xxx)
A1388	OLED Display option for 3-wire Analog & Modbus version (only for S699 3xxx & S699 4xxx)

In any case, if you need support to choose the right model for your application, please feel free to contact SUTO sales support.

8.1 Installation Requirements

- The device is for indoor use only! At an outdoor installation, it must be protected from solar radiation and rain.
- It is strongly recommended not to install S211 / S215 / S220 permanently in a wet environment, which usually exists right after a compressor outlet.
- The flowing air or gas must pass the sensor tip for a proper measurement. This can be realized with a measurement chamber.

For an installation without the measuring chamber, you must insert the device to the required depth, as described in section 8.2.3.

- Sensor orientation requirement

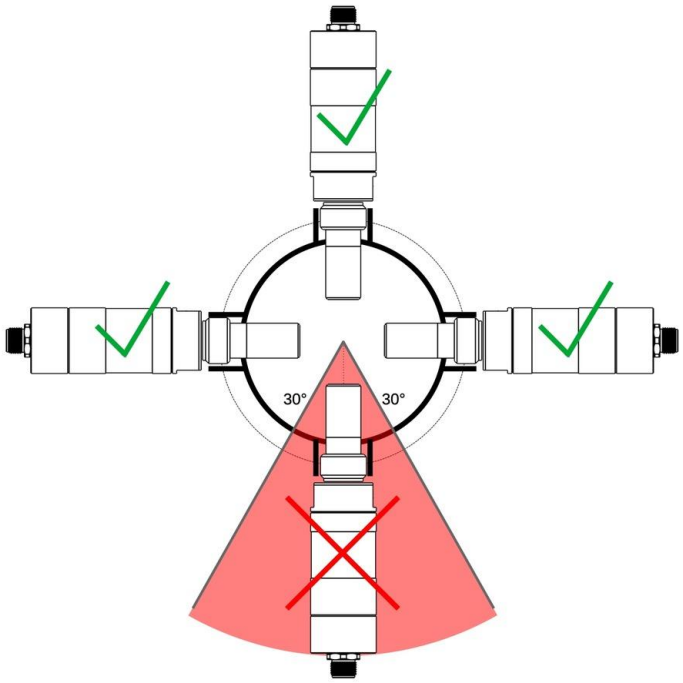

Install the device only in the recommended area, as shown in picture on the left.

The angle between the device and the centre vertical line of the tube must be greater than 30°.

An upside-down installation is not permitted.



CAUTION!

Wrong measurement is possible if the instrument is not installed correctly.

8.2 Installation Procedure

8.2.1 Install with Measuring Chamber A699 3491

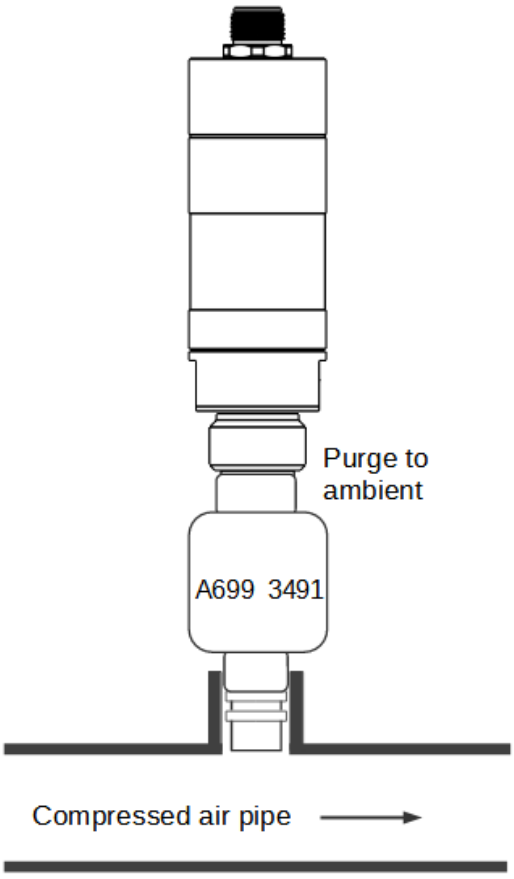

1. Mount the transmitter on the measuring chamber by using the G1/2” connection.

2. Make sure the transmitter is tightly sealed, therefore the sealing ring on the transmitter must be used.

3. Connect the measuring chamber to the compressed air system using a quick connector. Make sure the Dew Point Transmitter is screwed on the chamber before connecting.
   The measuring chamber will create a purge flow.

8.2.2 Install with By-pass Measuring Chamber A699 3493

For the model A699 3493, there are two installation methods:

Method 1: Full pass-through by-pass installation
This method is to be used when the full air flow is passing through the measuring chamber.

1. Connect the inlet of the chamber using a 6 mm Teflon hose to your system.
   Note: The full flow must pass the measuring chamber. Ensure a sufficient flow rate to achieve a fast response time.
2. Connect the outlet of the chamber to your system using the 6 mm hose quick connector.

See figure below for details.

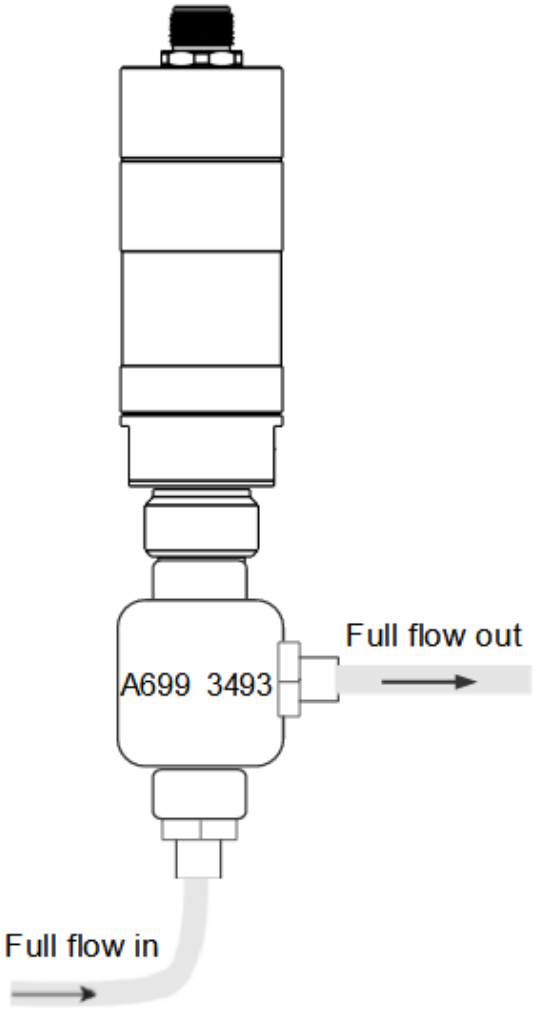

Method 2: By-pass installation

Note: To use the measurement chamber in a by-pass you must ensure a pressure difference between P1 and P2 as indicated in the picture below.

1. Connect the inlet of the chamber to your pipe system.
2. Connect the outlet of the chamber to your pipe system where the pressure is known to be lower than the inlet pressure.

Note: The pressure difference P1 > P2 is needed to create a by-pass flow through the chamber. If there is no pressure difference between P1 and P2, there will be no flow through the chamber and therefore the response time will be very slow, or the device will not even respond at all to the dew point changes.

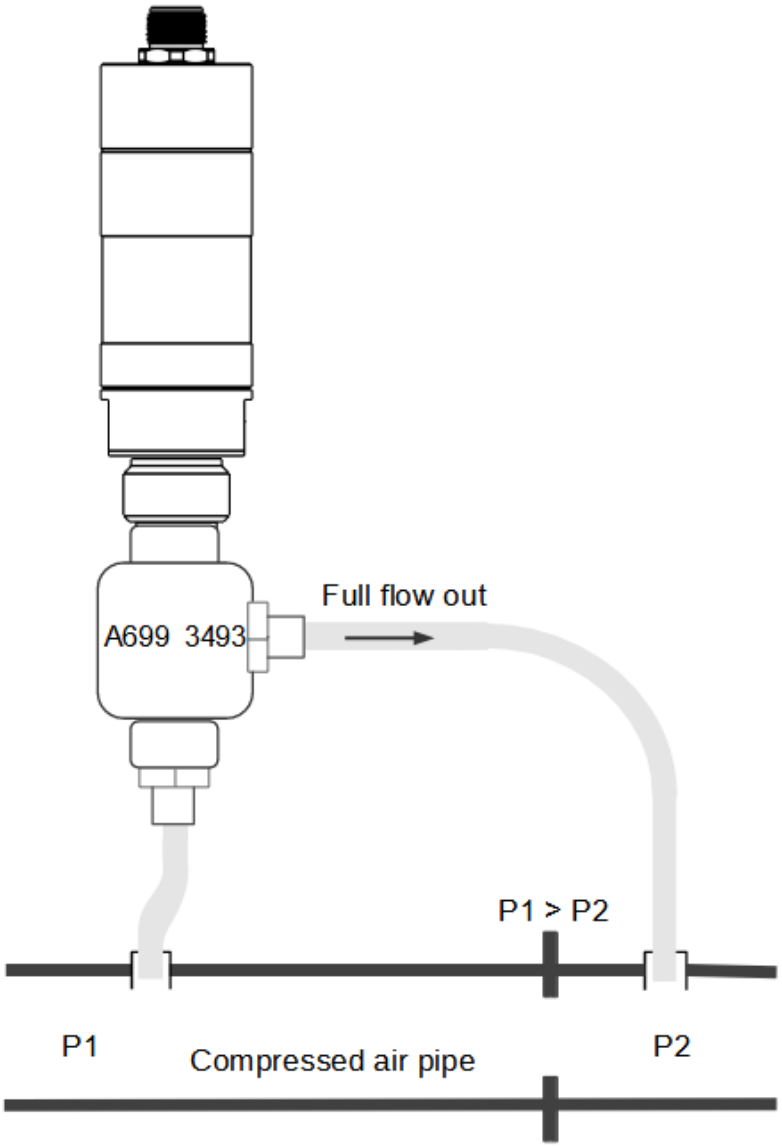

8.2.3 Install without Measuring Chamber

This is the full flow installation. The sensor is in the pipe.

Method 1: Install through a nozzle

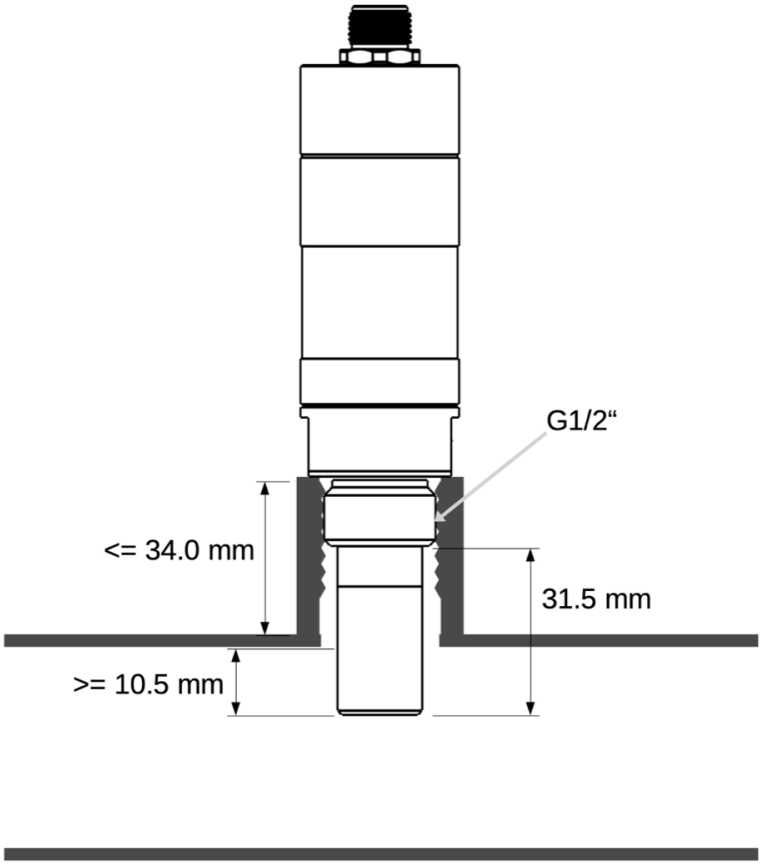

- Install the device only if the system is pressure-less.
- Check the size of the nozzle and make sure that no less than 1/3 of the sensor tip is inside of the pipe.
- The inner thread of the nozzle must be G 1/2”.

Method 2: Install with NPT thread adapter

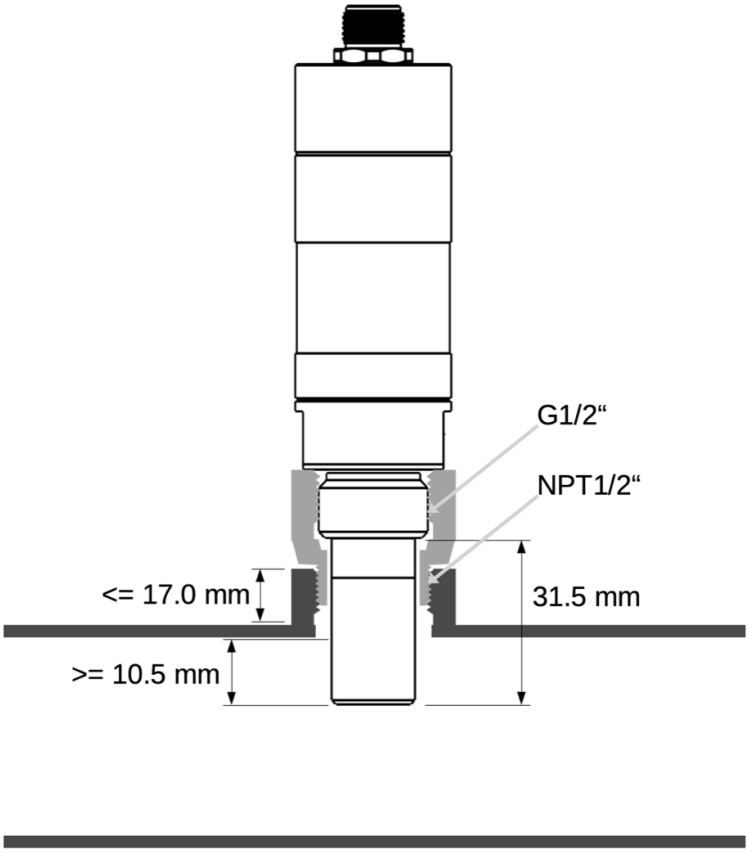

- Install the device only if the system is pressure-less.
- Please check the size of the nozzle and make sure not less than 1/3 of the sensor tip is inside of the pipe.
- The thread adapter (C190 0534) is used to adapt from G 1/2" sensor side to NPT 1/2" process connection.

8.3 Remove the Dew Point Transmitter

Unscrew the device off the measurement chamber or from the nozzle. Please make sure that the system is pressure-less before the Dew Point Transmitter is removed.

8.4 Electrical Connection

Connection pins of the M12 plug

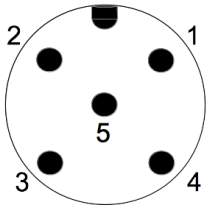

Connection pins
(View onto the connector)

Pin assignment of the M12 plug

Dew Point Transmitter versions: S699 1215 / S699 1211 / S699 1220
Output signal: 2-wire analog output and SDI

Pin 1	Pin 2	Pin 3	Pin 4	Pin 5
SDI	**$-V_B$** **(Analog loop)**	**$+V_B$** **(Analog loop)**	**NA**	**NA**
Brown	White	Blue	Black	Gray

Dew Point Transmitter versions: S699 2215 / S699 2211 / S699 2220
Output signal: 3-wire analog output and SDI

Pin 1	Pin 2	Pin 3	Pin 4	Pin 5
SDI	**$-V_B$**	**$+V_B$**	**+Ia** **4 … 20 mA**	**NA**
Brown	White	Blue	Black	Gray

Dew Point Transmitter versions: S699 3215 / S699 3211 / S699 3220 / S699 4215 / S699 4211/ S699 4220
Output signal: 3-wire analog output and Modbus/RTU

Pin 1	Pin 2	Pin 3	Pin 4	Pin 5
+Ia **4 … 20 mA**	**$-V_B$**	**$+V_B$**	**D+** **Modbus/RTU**	**D-** **Modbus/RTU**
Brown	White	Blue	Black	Gray

Legend to pin assignment

SDI	Digital signal (internal use)
$-V_B$	Negative supply voltage
$+V_B$	Positive supply voltage

+Ia	Active 4 … 20 mA signal
NA	Not applicable
D+	Modbus/RTU data +
D-	Modbus/RTU data -

CAUTION!

Do not screw the M12 plug using force. Otherwise, it may damage the connecting pins.

8.5 Connection to Customer Equipment

This section provides figures to show how outputs supported by the S211/S215/S220 connect with the customer equipment.

2-wire analog output

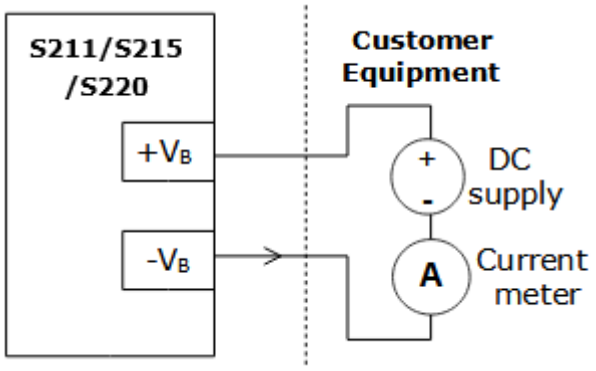

3-wire analog output

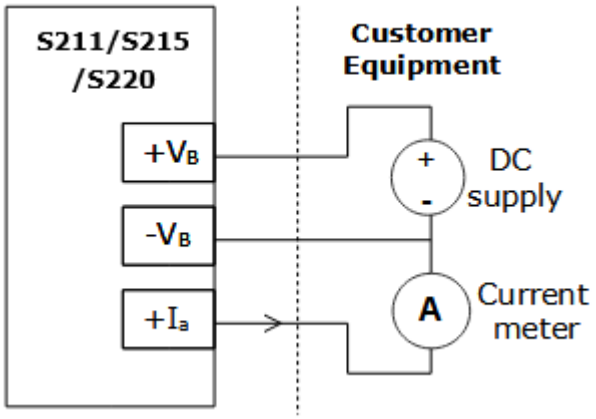

3-wire analog and Modbus/RTU outputs

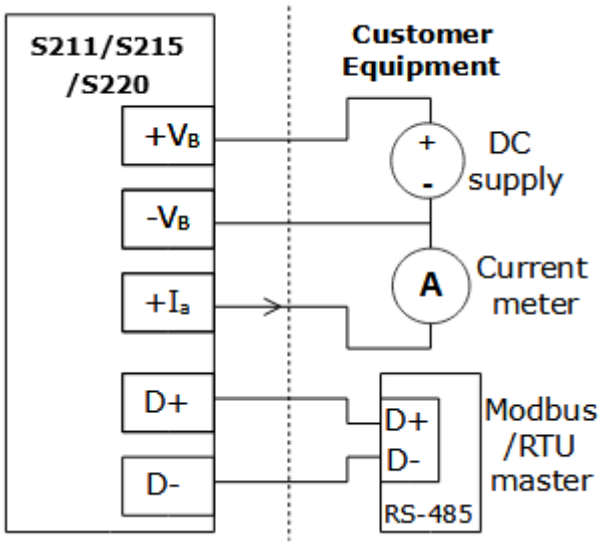

Modbus/RTU output

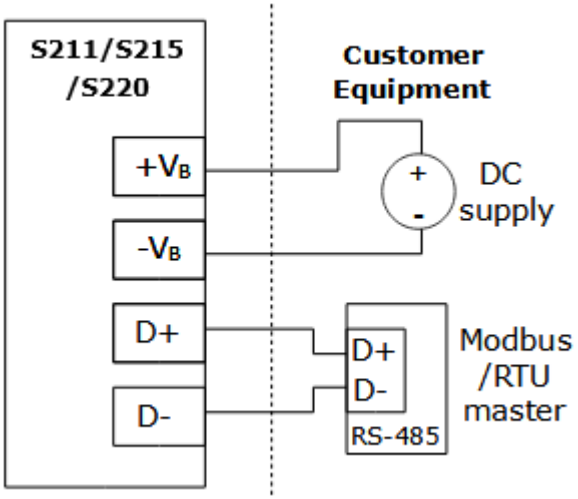

9 Display (Optional)

9.1 Display Information

The dew point transmitter series S211, S215 and S220 can be equipped with an optional display directly mounted on the sensor. The display shows the live values of Dew point, Temperature, Humidity and Pressure (if the dew point transmitter is equipped with a pressure sensor).

9.2 Compatibility

Two versions of the display are available.

Display option with part number A1387 - which is compatible with dew point transmitters having 3-wire and SDI output (S699 2xxx).

Display option with part number A1388 - which is compatible with dew point transmitters having 3-wire and Modbus/RTU output (S699 3xxx and S699 4xxx).

For dew point transmitters having a 2-wire and SDI output (S699 1xxx) there is no display option available, because of the limited current being available.

Note: Displays cannot be exchanged between dew point transmitters having 3-wire and SDI output (S699 2xxx) and dew point transmitters having 3-wire and Modbus/RTU output (S699 3xxx and S699 4xxx), they are not compatible to be swapped.

9.3 Displayed Values

The display automatically cycles through all values every 3 seconds. This means the display is showing every 3 seconds the live values of Dew point, Temperature, Humidity and Pressure (if the dew point transmitter is equipped with a pressure sensor) and is cycling through these automatically.

9.4 Display Rotation

The display can be easily rotated by 340° to fit your application. To do this, please loosen the two hex-screws at both sides of the dew point transmitter. Do not unscrew them fully; only loosen them. Now you can turn the display by 340°. When the desired position is achieved, tighten the two hex-screws from both sides to fix the display position.

10 Signal Outputs

10.1 Analog Output

Depending on the model, the Dew Point Transmitter provides a 2-wire or 3-wire analog output. The analog output ranges 4 ... 20 mA.

- The 2-wire analog output is a current loop (loop-powered sensor).
- The 3-wire analog output is an active current output.

10.1.1 Scaling

The following table shows the standard scaling of the analog output.

Type	Scaling	
S211	4 mA 20 mA	= -60°C Td = +20°C Td
S215	4 mA 20 mA	= -20°C Td = +50°C Td
S220	4 mA 20 mA	= -100°C Td = +20°C Td

For other ranges, please contact the manufacturer. The analog output can be allocated to the temperature, dew point, and humidity.

10.2 Modbus/RTU Interface

The default settings of the Modbus interface are as follows.

Mode	RTU
Baud rate	19200
Device address	Last two digits of serial number
Framing / parity / stop bit	8 / N / 1
Response time	1 second
Response delay	0 ms
Inter-frame spacing	7 char

Response message that the device returns to the master:

- Function code: 03

The information for the byte order is shown in the table below.

Byte order for 2-byte and 4-byte data

Byte Order	Sequence				Data Type
	1st	2nd	3rd	4th	
1-0-3-2	Byte 1 (MMMMMMMM*)	Byte 0 (MMMMMMMM *)	Byte 3 (SEEEEEEE)	Byte 2 (EMMMMMMM *)	FLOAT
1-0-3-2	Byte 1	Byte 0 LSB	Byte 3 MSB	Byte 2	UINT32 INT32
1-0	Byte 1 MSB	Byte 0 LSB	---	---	UINT16 INT16
1-0	Byte 1 XXX *	Byte 0 DATA	---	---	UINT8 INT8

Byte order for 8-byte data

Byte order	Sequence								Data Type
	1st	2nd	3rd	4th	5th	6th	7th	8th	
1-0-3-2-5-4-7-6	Byte 1	Byte 0	Byte 3	Byte 2	Byte 5	Byte 4	Byte 7	Byte 6	User defined

* S: Sign, E: Exponent, M: Mantissa, XXX: no value

Explanations of MSB and LSB

MSB	MSB refers to Most Significant Byte first, which follows the Big-Endian byte order. For example, if the main system follows the MSB first order: When the 4-byte floating number, in the order of Byte1-Byte0-Byte3-Byte2, is received from the slave (sensor), the master must change the byte order to Byte3-Byte2-Byte1-Byte0 for the correct display of the value.
LSB	LSB refers to Least Significant Byte first, which follows the Little-Endian byte order. For example, if the main system follows the LSB first order: When the 4-byte floating number, in the order of Byte1-Byte0-Byte3-Byte2, is received from the slave (sensor), the master must change the byte order to Byte0-Byte1-Byte2-Byte3 for the correct display of the value.

Note: If your application needs other Modbus settings, please specify this when ordering. Modbus communication settings as well as other settings can be changed by the S4C-DP App or through the Windows-based Service Software.

10.2.1 Holding Register Table for Modbus/RTU

Modbus Register Address	Channel description	Read/ Write	Data Type	Data Length
2000	Group ID	R	INT16U	2-Byte
2001	Device ID	R	INT16U	2-Byte
2002	Serial number	R	INT32U	4-Byte
2004	FW/HW	R	INT16U	2-Byte
2005	Calibration date	R	DOUBLE	8-Byte
2009	Valid days from calibration date	R	INT16U	2-Byte
2010	Measuring Channel number	R	INT16U	2-Byte
2011	Device name	R	string	16-Byte
2100	Alternative humidity unit One byte on byte 0 of the holding register (see “unit” table on next page for details)	R/W	INT16U	2-Byte
2101	Static pressure (in bar(g))	R/W	FLOAT	4-Byte
2103	Atmospheric pressure (in hPa)	R/W	FLOAT	4-Byte
2200	Unit+Resolution+Data type of Dew point	R	INT16U	2-Byte
2201	Unit+Resolution+Data type of Alternative humidity	R	INT16U	2-Byte
2202	Unit+Resolution+Data type of Pressure	R	INT16U	2-Byte
2203	Unit+Resolution+Data type of Temperature	R	INT16U	2-Byte
2300	Status	R	INT16U	2-Byte
2301	Channel Value of Dew point	R	FLOAT	4-Byte
2303	Channel Value of Alternative humidity	R	FLOAT	4-Byte
2305	Channel Value of Pressure	R	FLOAT	4-Byte
2307	Channel Value of Temperature	R	FLOAT	4-Byte

"Unit+Resolution+Data type" Channel

- First byte is unit.

1	°C
2	°F
3	% rH
4	°C Td
5	°F Td
7	mg/m^3

8	g/kg
9	g/m^3
30	ppm[v]
31	°C Td atm.
32	°F Td atm.
35	kPa(g)

36	MPa(g)
38	bar(g)
39	psi(g)
54	g/m^3 atm.
55	mg/m^3 atm.

- Second byte:

Bit7 Bit6 Bit5 Bit4	**Bit3 Bit2 Bit1 Bit0**
Data type: 0 float 1 4-byte unsigned integer 2 double	Resolution: 0 0 1 0.0 2 0.00 3 0.000 4 0.0000

- "Status" channel

The highest bit is used for indicating if any setting is changed by users. The rest bits are used for indicating if the measuring channels that follows the Status channel are working properly or not.

Bit	Description
15	0: Sensor settings have never been changed since last reading from the master. 1: Sensor settings have been changed since last reading from the master
0	0: The 1st measuring channel that follows the Status channel (addressed 2301) is working properly. 1: This measuring channel is not working properly.
1	0: The 2nd measuring channel that follows the Status channel (addressed 2303) is working properly. 1: This measuring channel is not working properly.
2	0: The 3rd measuring channel that follows the Status channel

	(addressed 2305) is working properly. 1: This measuring channel is not working properly.
3	0: The 4th measuring channel that follows the Status channel (addressed 2307) is working properly. 1: This measuring channel is not working properly.
4 … 14	Not used

10.2.2 Connect Modbus/RTU Devices to a Master

Sensors and devices with a Modbus/RTU output can be connected to a Modbus master device. This master can be either SUTO displays and gateways or any third-party Modbus/RTU master.

See below specifications of the Modbus/RTU connections.

10.2.2.1 Modbus/RTU Cable Length

A Modbus/RTU bus line has limitations which shall not be exceeded, otherwise the communication might not be stable.

- The maximum total bus length must not exceed 1200 m.
- The stub length to each node must not exceed 30 cm.

See the picture below for details.

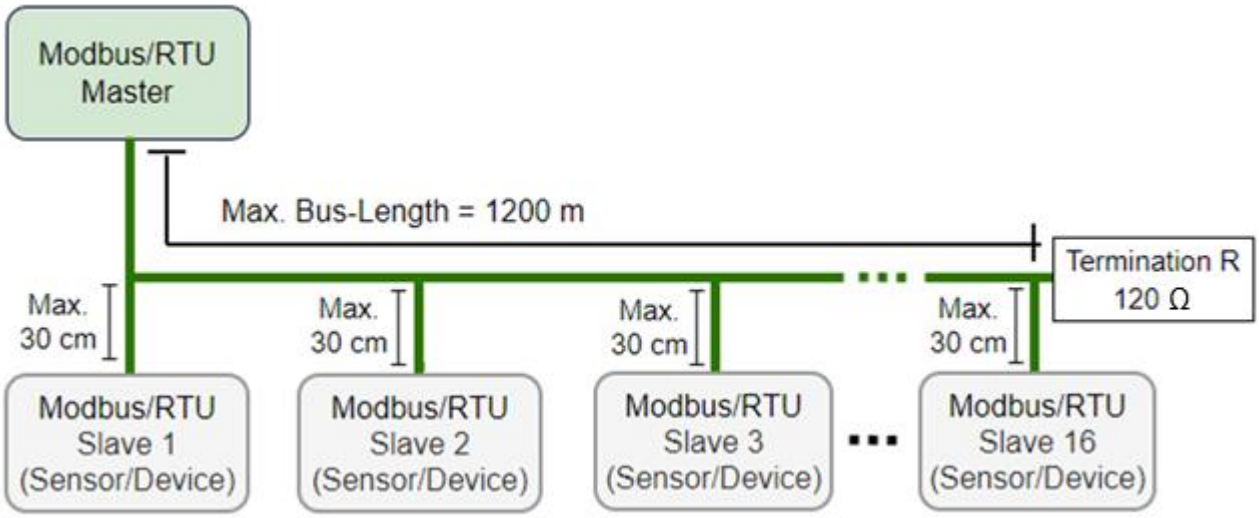

10.2.2.2 Modbus/RTU Wiring and Cable Type

To ensure a stable communication a twisted-pair bus cable must be chosen to set up the Modbus/RTU communication.

- Bus-cable specifications must follow the EIA485 Standard, must be twisted pair and shielded, for example 2 x 2 x 0.22 mm^2, Li-2YCY (A553 0123).
- The shield must be connected at one end to the master GND connection.

- At the end of the bus, a 120 Ω resistor should be placed a termination resistor.

See the picture below for details.

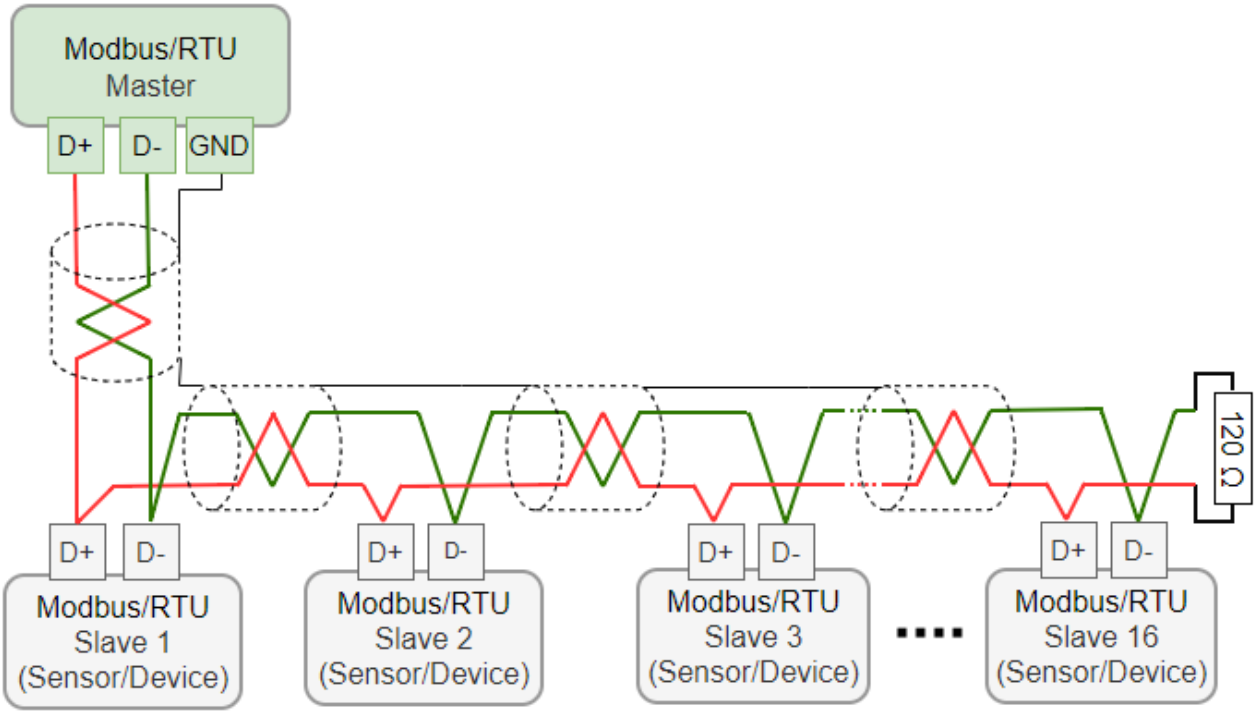

10.2.2.3 Daisy-Chain using RS-485 Splitter

SUTO devices with M12 connectors can be easily connected in a Modbus/RTU daisy-chain using a M12 RS-485 splitter (A554 3310). Furthermore, this allows to easily place the M12 termination resistor (C219 0055) at the last splitter in the bus-chain.

See below example for reference.

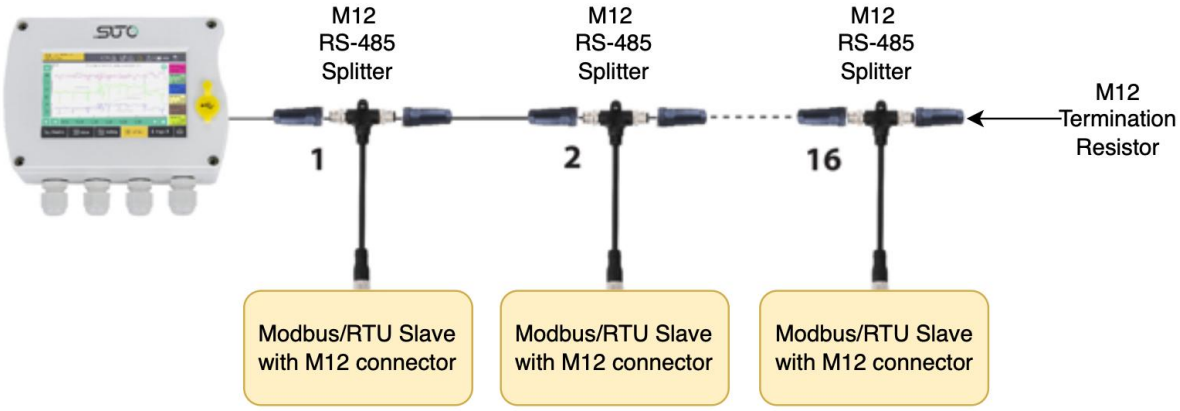

Connect Modbus/RTU slaves with M12 connectors to a daisy-chain using M12 RS-485 splitters.

The M12 RS-485 splitter (A554 3310) comes with two M12 connectors to easily wire the chain.

10.2.2.4 Topology of Modbus/RTU Daisy-Chain

The recommended bus topology is to connect devices as a daisy-chain, as shown in the figure in section 10.2.2.1 . Other connection topologies are not recommended and should be avoided.

Avoid a connection of Slaves to the master in ring or star topology.

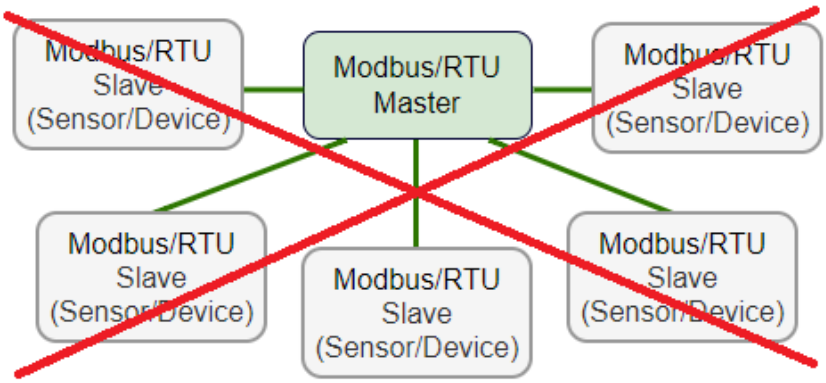

Avoid a star topology

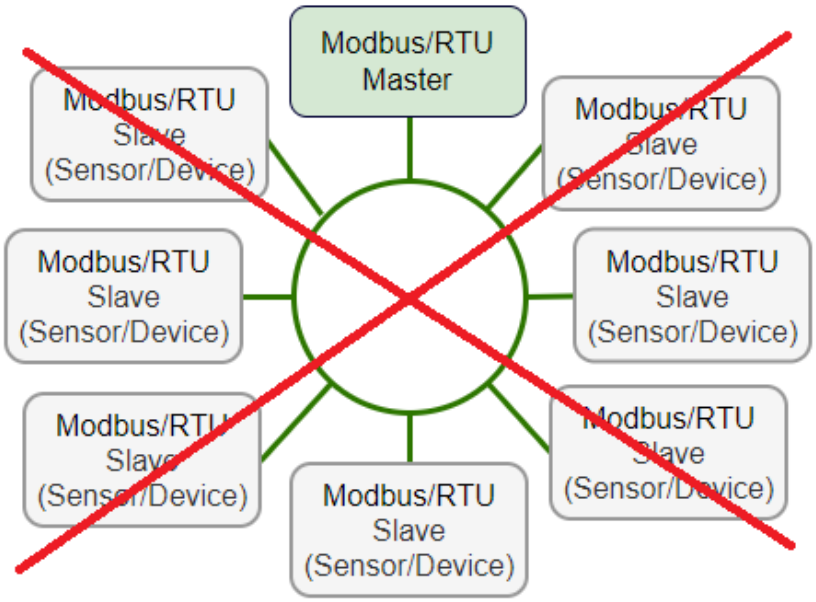

Avoid a ring topology

11 Optional Accessories

11.1 Measuring Chambers

There are different types of measuring chambers for example Measuring chamber with quick connector, by-pass chamber with in and out connection, measuring chamber for dryer installation, or high-pressure chamber.

For more information, contact your distributor or the manufacturer.

11.2 Wireless DP Transmitter Adapter

The Wireless DP Transmitter Adapter provides a wireless interface between the S4C-DP App and the S211/S215/S220. With this DP Adapter, you can manage the S211/S215/S220 settings through the free S4C-DP App. For details, see *Wireless DP Transmitter Adapter* instruction manual.

12 Calibration

The instrument is calibrated ex works. The exact calibration date is printed on the certificate that is supplied together with the instrument. The accuracy of the instrument is regulated by the on-site conditions, and parameters such as oil, high humidity, and other impurities can affect the calibration and furthermore the accuracy. Therefore, it is recommended you calibrate the instrument at least once per year. The calibration is excluded from the instrument warranty. Please contact the manufacturer for details.

13 Maintenance

Please observe from time to time the sinter cap. If it appears dirty, it should be replaced; please contact the manufacturer



CAUTION!

Contaminated filters can lead to longer response time and to wrong measurements.

14 Disposal of Waste



Electronic devices are recyclable material and do not belong in the household waste.
The device, its accessories and the packaging must be disposed of in accordance with local regulations. Disposal can also be carried out by the manufacturer; please contact the manufacturer.

Contact Details

SUTO iTEC GmbH

Grißheimer Weg 21
D-79423 Heitersheim
Germany

Tel: +49 (0) 7634 50488-00
Email: sales@suto-itec.com

SUTO iTEC (ASIA) Co., Ltd.

Room 10, 6/F, Block B, Cambridge Plaza
188 San Wan Road, Sheung Shui, N.T.
Hong Kong

Tel: +852 2328 9782
Email: sales.asia@suto-itec.com

SUTO iTEC Inc.

5460 33rd St SE
Grand Rapids, MI 49512
USA

Tel: +1 (616) 800-7886
Email: sales.us@suto-itec.com

SUTO iTEC (China) Co. Ltd

11A Floor, D3 Building, TCL International E City
No. 1001 Zhongshanyuan Road
Nanshan District, Shenzhen 518057
China

Tel: +86 (0) 755 8619 3164
Email: sales.cn@suto-itec.com

SUTO iTEC India

2062-2063, S-wing 2nd Floor,
Akshar Business Park, Plot No 3,
Sector 25, Vashi, Navi Mumbai – 400 703
India

Tel: +91-9825744804
Email: sales.in@suto-itec.com

SUTO iTEC (Thailand) Co., Ltd.

18/6 Romklao Road, Khlong Sam Prawet,
Lat Krabang
Bangkok 10520
Thailand

Tel: +66 (0)2108 9658
Email: sales.th@suto-itec.com

PT SUTO iTEC Indonesia

ITC Cempaka Mas Office Tower 8th floor
room 8 B. Jl. Letjend Suprapto Kav 1
Jakarta 10640
Indonesia

Tel: +6221 4280 3853
Email: sales.id@suto-itec.com

SUTO iTEC (Malaysia) Sdn Bhd

No.22-A, Jalan Tiara 2
Tiara Square, UEP Subang Jaya Industrial Park
47600 Subang Jaya Selangor
Malaysia

Tel: +603 5122 2082
Email: sales.my@suto-itec.com

All rights reserved ©

Modifications and errors reserved

S211-S215-S220_IM_EN_V2026-1