Flow Sensor S401 -- Installation & Configuration

1 Application

Flow and consumption measurement on dry and clean compressed air free of water/oil droplets and large particles. A usual installation point is after dryer and filter.

Set A *- S401 with the local display* ***Set B*** *- S401 without the local display*



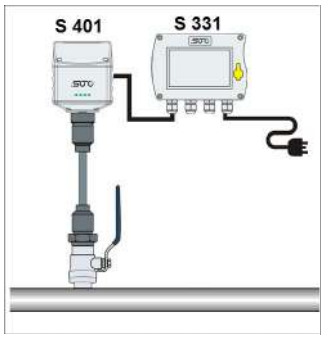

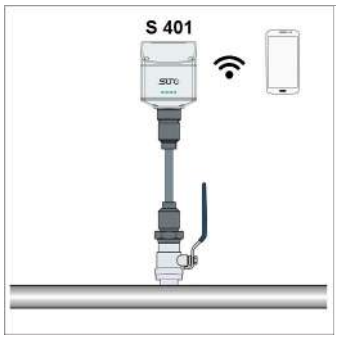

2 Choose the installation point

Install the sensor as far as possible away from any disturbances.

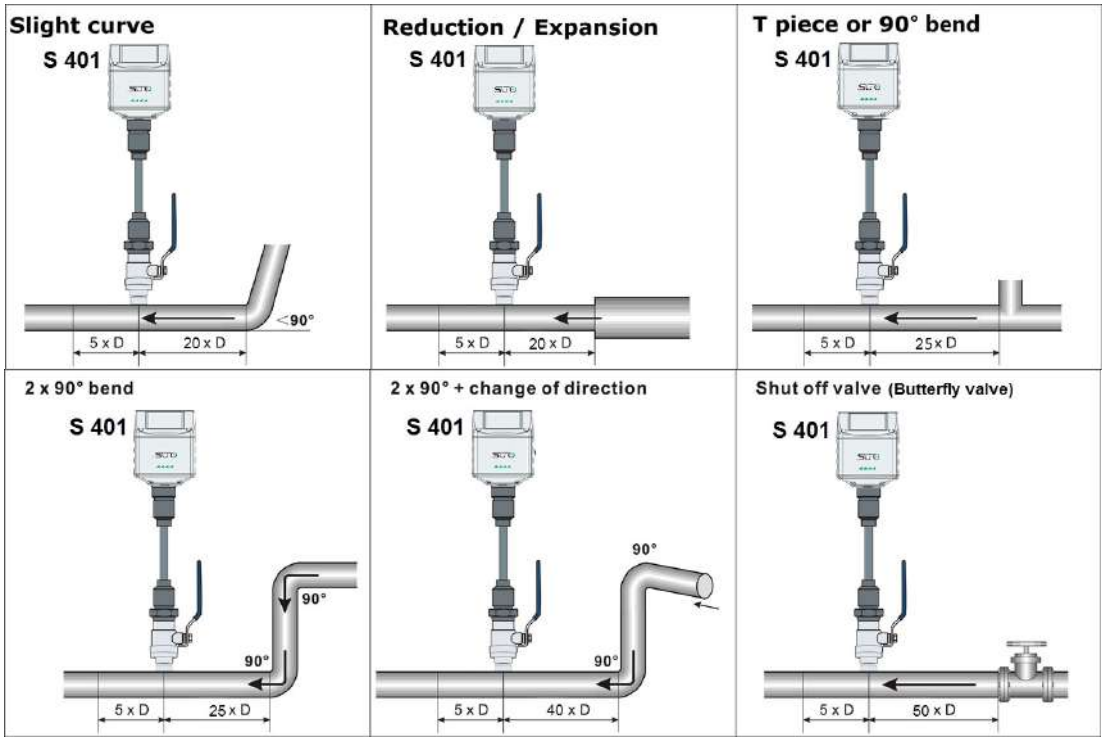

3 Mount a ball valve and insert the sensor

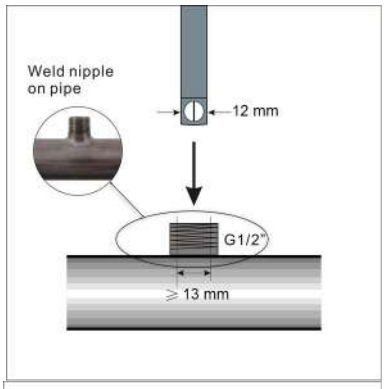

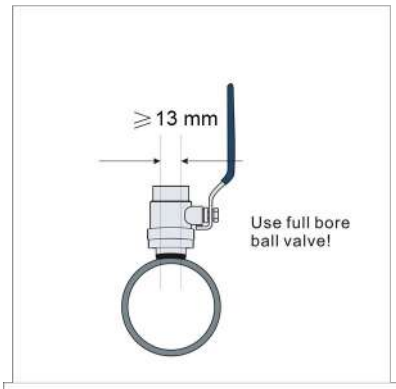

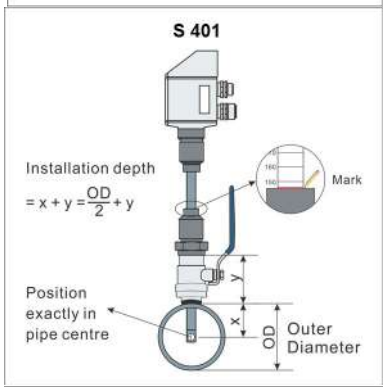

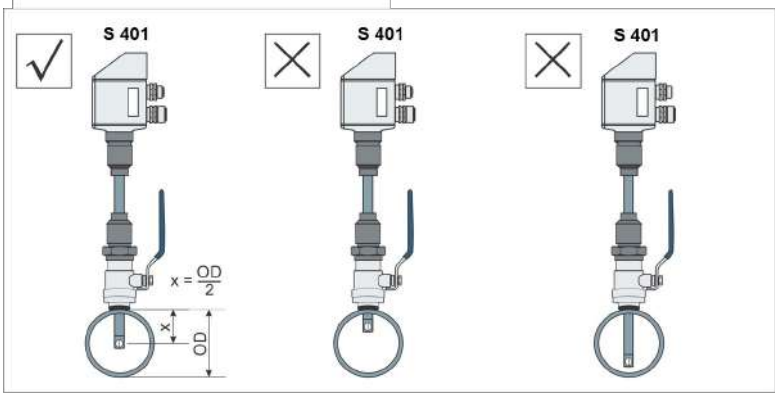

4 Align flow direction

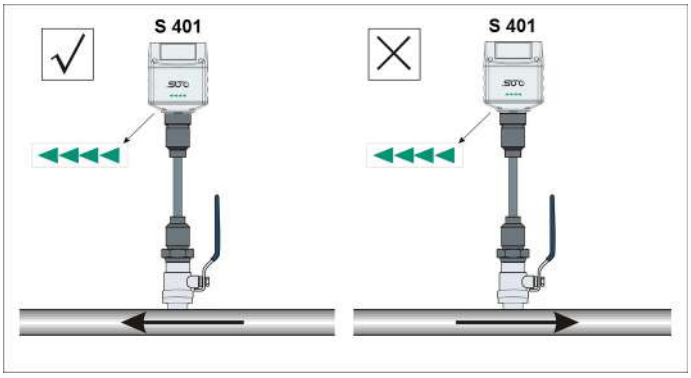

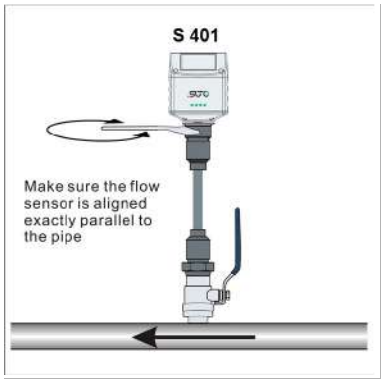

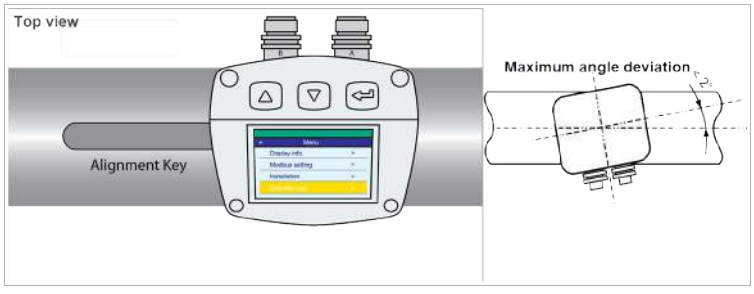

5 Connect the Cable

Output Version	Connector	Pin 1	Pin 2	Pin 3	Pin 4	Pin 5
Modbus (P/N: A1411)	A	SDI	-VB	+VB	DIR	DIR
	B	GND	-VB	+VB	D+	D-
4 ... 20mA plus pulse (P/N: A1410)	A	SDI	-VB	+VB	DIR	DIR
	B	NC	SW	SW	+I	-I
4 ... 20mA plus pulse, compatible to S 400 (P/N: A1413)	A	SDI	-VB	+VB	+I	+P
	B	NC	-VB	DIR	SW	SW
Wire colour		brown	white	blue	black	grey

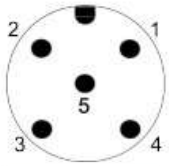

Connection pins (top view)

Legend to pin assignment

GND:	Ground for Modbus	SW:	Isolated pulse output
SDI:	Digital signal (internal use)	DIR	Flow direction input
-VB:	Negative supply voltage	D+:	Modbus data +
+VB:	Positive supply voltage	D-:	Modbus data -
+I:	Positive 4...20 mA signal	M:	M-Bus data
-I:	Negative 4... 20 mA signal	NC:	Not connected
+P:	Pulse output		

6 Configure the sensor

Configure the sensor using the service APP S4C-FS or the optional local display. S4C-FS is available for download on our Web site or from the Google Play Store.

Key settings include:

- Pipe inner diameter = pipe outer diameter (OD) – (2 X wall thickness)
- Units of measurement
- Analog output scaling
- Modbus communication parameters

Option 1: Using the service App S4C-FS

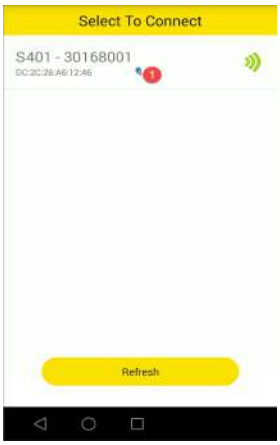





Option 2: Using the optional local display

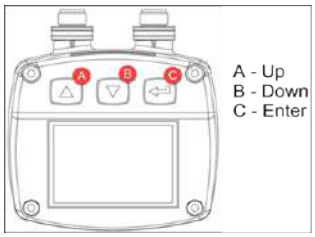

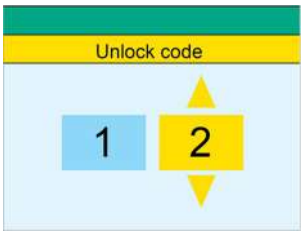

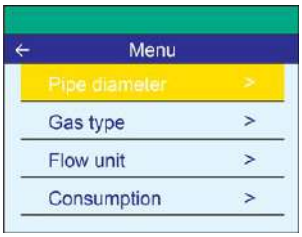

Attention:
This is a quick user guide which does not replace the corresponding instruction and operation manual. Only trained and authorized staff who read and understand the instruction and operation manual shall perform the installation, setup and operation.