English

Instruction and Operation Manual

S030

Electrical Current Transmitter



Dear Customer,

Thank you for choosing our product.

The operating instructions must be read in full and carefully observed before you start up the device. The manufacturer cannot be held liable for any damage which occurs as a result of non-observance or non-compliance with this manual.

Should the device be tampered with in any manner other than a procedure which is described and specified in the manual, the warranty is cancelled and the manufacturer is exempt from liability.

The device is destined exclusively for the described application.

SUTO offers no guarantee for the suitability for any other purpose. SUTO is also not liable for consequential damage resulting from the delivery, capability or use of this device.

Revision: 2026-1

Last modifications: July, 2026

Table of contents

1 Safety Instructions....4
2 Registered Trademarks....5
3 Application....6
4 Features....6
5 Technical Data....7
5.1 General....7
5.2 Electrical Data....7
5.3 Output Signals....7
5.4 Accuracy 7
6 Installation 8
6.1 Installation....8
6.2 Electrical Connection....9
7 Signal Outputs....9
8 Maintenance....9
9 Disposal of Waste....10

1 Safety Instructions

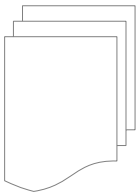

Please check if this instruction manual accords to the product type.

Please observe all notes and instructions indicated in this manual. It contains essential information which have to be observed before and during installation, operation and maintenance. Therefore this instruction manual has to be read carefully by the technician as well as by the responsible user / qualified personnel.

This instruction manual has to be available at the operation site of the device at any time. In case of any obscurities or questions, regarding this manual or the product, please contact the manufacturer.

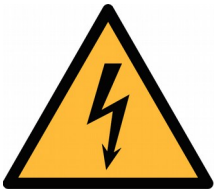

WARNING!

Voltage used for supply!

Any contact with energized parts of the product, may lead to an electrical shock which can lead to serious injuries or even death!

- Consider all regulations for electrical installations.
- The system must be disconnected from any power supply during maintenance work.
- Any electrical work on the system is only allowed by authorized qualified personal.

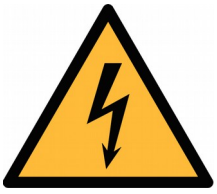

WARNING!

Permitted operating parameters!

Observe the permitted operating parameters, any operation exceeding this parameters can lead to malfunctions and may lead to damage on the instrument or the system.

- Do not exceed the permitted operating parameters.
- Make sure the product is operated in its permitted limitations.
- Do not exceed or undercut the permitted storage and operation temperature.

General safety instructions

- It is not allowed to use the product in explosive areas.
- Please observe the national regulations before/during installation and operation.

Remarks

- It is not allowed to disassemble the product.



ATTENTION!

Measurement values can be affected by malfunction!

The product must be installed properly, otherwise it may lead to wrong measurement values, which can lead to wrong results.

Storage and transportation

- Make sure that the transportation temperature of the device is between -30°C ... 80°C.
- For transportation it is recommended to use the packaging which comes with the device.
- Please make sure that the storage temperature of the device is between -40°C ... 80°C.
- Avoid direct UV and solar radiation during storage.
- For the storage the humidity has to be <90%, no condensation.

2 Registered Trademarks

SUTO®	Registered trademark of SUTO iTEC
MODBUS®	Registered trademark of the Modbus Organization, Hopkinton, USA
HART®	Registered trademark of the HART Communication Foundation, Austin, USA

3 Application

The S030 Electrical Current Transmitter is designed to measure the current carried on a power conductor within the permissible operating parameters. These parameters can be found in the technical data section.

The S030 Electrical Current Transmitter is not developed to be used in explosive areas. For the use in explosive areas please contact the manufacturer.

Note: The S030 is intended for stand-alone applications. The signal is a 4 … 20 mA output which cannot be connected to the S110 Power and Energy Meter. If you are looking for current transducers for the S110, please refer to the S110 order sheet.

4 Features

- Easy installation
- Wide measuring range
- Accurate current sensing
- 4 mA ... 20 mA output signal
- IP67 casing provides robust protection in the industrial environment

5 Technical Data

5.1 General

CE		
Measuring range	10 A ... 1000 A (AC)	30 A ... 3000 A (AC)
	S554 0156 S554 0155	S554 0157 S554 0158
Fundamental frequency	40 Hz ... 70 Hz	
Operating temperature	-30 ... 80°C	
Isolation voltage	Coil: 3000 V Signal wire: 1000 V	
Safety	1000 V CATIII, 600 V CATIV	
Protection class	IP67 (Clamp sensor) IP20 (Electronics)	
Clamp diameter	100 mm	150 mm
Weight	250g	

5.2 Electrical Data

Power supply	21 VDC ... 27 VDC

5.3 Output Signals

Analogue output	4 ... 20 mA DC equal to 0 ... max. AC current
Output ripple factor	5%

5.4 Accuracy

Accuracy	±0.5% (At the center of the coil)

6 Installation

Please make sure that all components listed below are included in your package.

Qty	Description	Item no.
1	S030 Electrical Current Transmitter	S554 0155 / S554 0156 S554 0157 / S554 0158
1	Instruction manual	No P/N



ATTENTION!

Wrong measurement is possible if the transmitter is not installed correctly.

The S030 is for indoor use only! At an outdoor installation, the transmitter must be protected from solar radiation and rain.

6.1 Installation

The following steps explain the procedure of an appropriate installation.

1. Fit the coil around the isolated conductor in a way that the conductor remains in the centre of the coil ring.
2. Bring the coil ends together and lock it with the screw ring.

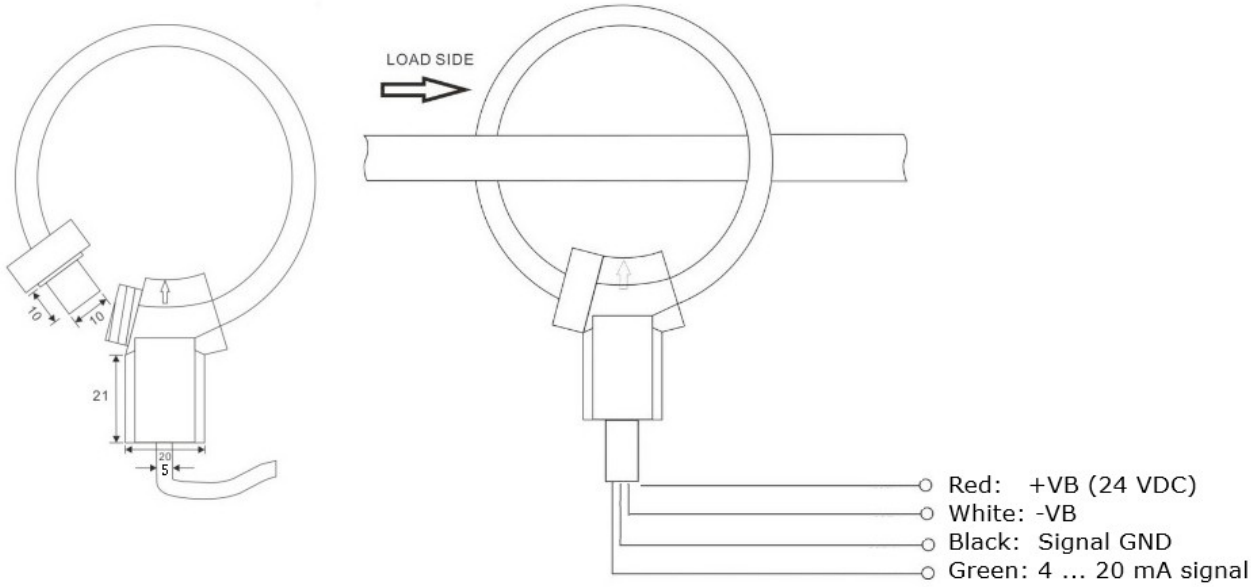

6.2 Electrical Connection

There are two different types of the S030 Electrical Current Transmitter:

- Model S554 0155 / S554 0158 with an open wire end. See the table below for the electrical connection:

Wire colour	Signal
Red	+ VB (24 VDC)
White	- VB
Black	Signal GND
Green	4 mA ... 20 mA Signal

- Model S554 0156 / S554 0157 come with a connector to the S551-P6. For the electrical connection please use the port 3 or 4 of the S551-P6.

7 Signal Outputs

The S030 Electrical Current Transmitter has a 3-wire analog output with range of 4 mA ... 20 mA. This output is scaled to:

- 4 mA = 0 A
- 20 mA = 1000 / 3000 A

8 Maintenance

- Keep the transmitter clean and free of surface contamination.
- Clean the transmitter with a soft cloth damp with a water and neutral soap only.
- Make sure the product is dry before use.
- Do not use or leave the product in particularly dirty or dusty environment.



ATTENTION!

Do not use corrosive chemical products, solvents or aggressive detergents to clean the transmitter.

9 Disposal of Waste



Electronic devices are recyclable material and do not belong in the household waste.
The transmitter, accessories and its packings must be disposed according to your local statutory requirements.
The dispose can also be carried by the manufacturer of the product. For more information, please contact the manufacturer.

SUTO iTEC GmbH

Grißheimer Weg 21
D-79423 Heitersheim
Germany

Tel: +49 (0) 7634 50488 00
Email: sales@suto-itec.com
Website: www.suto-itec.com

SUTO iTEC (ASIA) Co., Ltd.

Room 10, 6/F, Block B, Cambridge Plaza
188 San Wan Road, Sheung Shui, N.T.
Hong Kong

Tel: +852 2328 9782
Email: sales.asia@suto-itec.com
Website: www.suto-itec.com

SUTO iTEC Inc.

5460 33rd St SE
Grand Rapids, MI 49512
USA

Tel: +1 (616) 800-7886
Email: sales.us@suto-itec.com
Website: www.suto-itec.com

All rights reserved ©

Modifications and errors reserved

S030_IM_EN_V2026-1-new color